# TC-WE405/WR350Z/WR661

# SERVICE MANUAL

*US Model*
*Canadian Model*
*TC-WE405/WR350Z/WR661*
*AEP Model*
*UK Model*
*E Model*
*TC-WE405/WR661*
*Australian Model*
*Chinese Model*
*TC-WE405*

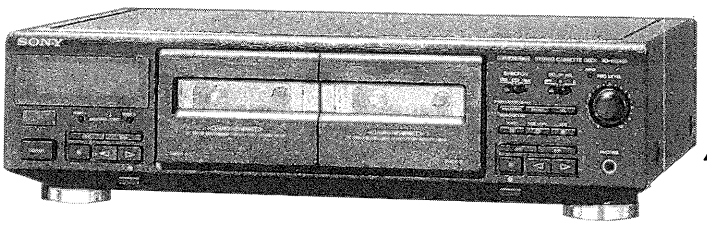

**Photo : TC-WE405**

Dolby noise reduction and HX Pro headroom extension manufactured under license from Dolby Laboratories Licensing Corporation. HX Pro originated by Bang & Olufsen.

"DOLBY", the double-D symbol ◻◻ and "HX PRO" are trademarks of Dolby Laboratories Licensing Corporation.

**TC-WE405**

| | | |
|---|---|---|
| Model Name Using Similar Mechanism | | TC-WR445 |
| Tape Transport Mechanism | DECK–A | TCM-220WR1 |
| Type | DECK–B | |

**TC-WR350Z/WR661**

| | | |
|---|---|---|
| Model Name Using Similar Mechanism | | NEW |
| Tape Transport Mechanism | DECK–A | TCM-220WR4E |
| Type | DECK–B | |

## SPECIFICATIONS

### System

**Recording system**
4-track 2-channel stereo

**Fast-winding time (approx.)**
180 sec. (with Sony C-60 cassette)

**Bias**
AC bias

**Signal-to-noise ratio (at peak level and weighted with Dolby NR off)**
Type I tape, Sony Type I (NORMAL): 55 dB
Type II tape, Sony Type II (HIGH): 57 dB
Type IV tape, Sony Type IV (METAL): 58 dB

**S/N ratio improvement (approximate values)**
With Dolby B NR on: 5 dB at 1 kHz, 10 dB at 5 kHz
With Dolby C NR on: 15 dB at 500 Hz, 20 dB at 1 kHz

**Harmonic distortion**
0.4% (with Type I tape, Sony Type I (NORMAL): 160 nWb/m 315 Hz, 3rd H.D.)
1.8% (with Type IV tape, Sony Type IV (METAL): 250 nWb/m 315 Hz, 3rd H.D.)

**Frequency response (Dolby NR off)**
Type I tape, Sony Type I (NORMAL): 30 - 16,000 Hz (±3 dB, IEC)
Type II tape, Sony Type II (HIGH): 30 - 17,000 Hz (±3 dB, IEC)
Type IV tape, Sony Type IV (METAL): 30 - 19,000 Hz (±3 dB, IEC)
30 - 13,000 Hz (±3 dB, –4 dB recording)
Type I tape, Sony Type I (NORMAL): 20 - 17,000 Hz (±6 dB)
Type II tape, Sony Type II (HIGH): 20 - 18,000 Hz (±6 dB)
Type IV tape, Sony Type IV (METAL): 20 - 20,000 Hz (±6 dB)

**Wow and flutter**
±0.15% W. Peak (IEC)
0.1% W. RMS (NAB)
±0.2% W. Peak (DIN)

— Continued on next page —

使用時は添付資料も参照のこと
Refer to the additional documents.

STEREO CASSETTE DECK

SONY®

## Inputs

**Line inputs (phono jacks)**
Sensitivity : 0.16 V
Input impedance : 47 kilohms

## Outputs

**Line outputs (phono jacks)**
Rated output level : 0.5 V at a load impedance of 47 kilohms
Load impedance : Over 10 kilohms

**Headphones (stereo phone jack) (TC-WE405 only)**
Output level : 0.25 mW at a load impedance of 32 ohms

## General

Power requirements

| Where purchased | Power requirements |
|---|---|
| US, Canadian model | 120 V AC, 60 Hz |
| AEP, UK, German, Italian, Singapore, Malaysia, Chinese model | 220 - 230 V AC, 50/60 Hz |
| Australian model | 240 V AC, 50/60 Hz |
| E model | 120/220/240 V AC, 50/60 Hz |

**Power consumption**
18 W

**Dimensions (approx) (w/h/d)**
430 × 120 × 305 mm (w/h/d)
(17 × 4 3/4 × 12 1/8 inches)
including projecting parts and controls

**Mass (approx.)**
3.8 kg (8 lbs 7 oz)

## Supplied accessories

Audio connecting cords (2 phono plugs - 2 phono plugs) (2)

## Optional accessory

Remote commander RM-J910

Design and specifications are subject to change without notice.

## SAFETY CHECK-OUT

After correcting the original service problem, perform the following safety checks before releasing the set to the customer:
Check the antenna terminals, metal trim, "metallized" knobs, screws, and all other exposed metal parts for AC leakage. Check leakage as described below.

### LEAKAGE

The AC leakage from any exposed metal part to earth ground and from all exposed metal parts to any exposed metal part having a return to chassis, must not exceed 0.5 mA (500 microampers). Leakage current can be measured by any one of three methods.

1. A commercial leakage tester, such as the Simpson 229 or RCA WT-540A. Follow the manufacturers' instructions to use these instruments.

2. A battery-operated AC milliammeter. The Data Precision 245 digital multimeter is suitable for this job.

3. Measuring the voltage drop across a resistor by means of a VOM or battery-operated AC voltmeter. The "limit" indication is 0.75 V, so analog meters must have an accurate low-voltage scale. The Simpson 250 and Sanwa SH-63Trd are examples of a passive VOM that is suitable. Nearly all battery operated digital multimeters that have a 2V AC range are suitable. (See Fig. A)

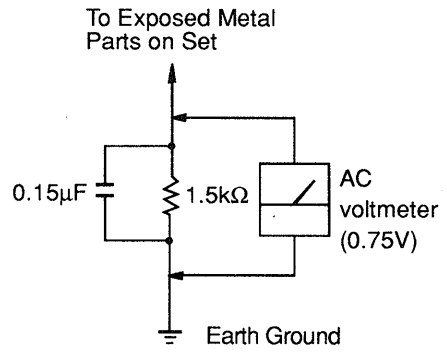


Fig. A. Using an AC voltmeter to check AC leakage.

**SAFETY-RELATED COMPONENT WARNING !!**

**COMPONENTS IDENTIFIED BY MARK ⚠ OR DOTTED LINE WITH MARK ⚠ ON THE SCHEMATIC DIAGRAMS AND IN THE PARTS LIST ARE CRITICAL TO SAFE OPERATION. REPLACE THESE COMPONENTS WITH SONY PARTS WHOSE PART NUMBERS APPEAR AS SHOWN IN THIS MANUAL OR IN SUPPLEMENTS PUBLISHED BY SONY.**

**ATTENTION AU COMPOSANT AYANT RAPPORT À LA SÉCURITÉ!!**

**LES COMPOSANTS IDENTIFIÉS PAR UNE MARQUE ⚠ SUR LES DIAGRAMMES SCHÉMATIQUES ET LA LISTE DES PIÈCES SONT CRITIQUES POUR LA SÉCURITÉ DE FONCTIONNEMENT. NE REMPLACER CES COMPOSANTS QUE PAR DES PIÈCES SONY DONT LES NUMÉROS SONT DONNÉS DANS CE MANUEL OU DANS LES SUPPLÉMENTS PUBLIÉS PAR SONY.**

## SERVICE NOTE

**[FL Display Tube All Lit and Key Check mode]**

Insert a short-chip into TP801 (2P) and turn ON the power switch. At first, all the FL display tube light up, then the system returns to normal display.
After that, press one of to enter the KEY CHECK mode. The number of FL display tube is light every pressing a button in the KEY CHECK mode.

## MODEL IDENTIFICATION

— BACK PANEL —

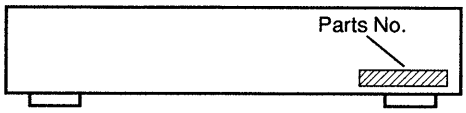


**TC-WE405**

| MODEL | PARTS No. |
|---|---|
| US | 3-931-433-0□ |
| CND | 3-931-433-1□ |
| AEP, G, MY, SP, CH | 3-931-433-2□ |
| UK | 3-931-433-3□ |
| E | 3-931-433-4□ |
| AUS | 3-931-433-5□ |

**TC-WR350Z**

| MODEL | PARTS No. |
|---|---|
| US | 3-934-887-0□ |
| CND | 3-934-887-1□ |

**TC-WR661**

| MODEL | PARTS No. |
|---|---|
| US | 3-931-436-0□ |
| CND | 3-931-436-1□ |
| AEP, G, IT | 3-931-436-2□ |
| UK | 3-931-436-3□ |
| E | 3-931-436-4□ |

- Abbreviation
  CND : Canadian model.
  G : German model.
  IT : Italian model.
  SP : Singapore model.
  MY : Malaysia model.
  AUS : Australian model.
  CH : Chinese model.

## TABLE OF CONTENTS


Section Title Page

SECTION 1. GENERAL ..... 4

SECTION 2. DISASSEMBLY
2-1. Front Panel ..... 5
2-2. Mechanism Deck ..... 5

SECTION 3. ADJUSTMENTS
3-1. Mechanical Adjustments ..... 6
3-2. Electrical Adjustments ..... 6
Record/Playback Head Azimuth Adjustment
[Deck-A] [Deck-B] ..... 6
Tape Speed Adjustment [Deck-B] ..... 7
Playback Level Adjustment [Deck-A] [Deck-B] ..... 7
Bias Consumption Current Adjustment [Deck-B] ..... 8
Record Bias Adjustment [Deck-B] ..... 8
Record Level Adjustment [Deck-B] ..... 8

SECTION 4. DIAGRAMS
4-1. Circuit Boards Location ..... 10
4-2. IC Pin Function
• IC801 System Controller (M38172M4-156FP) ..... 11
4-3. Printed Wiring Board — Deck (TCM-220WR1) Section — TC-WE405 ..... 13
4-4. Schematic Diagram — Deck (TCM-220WR1) Section — TC-WE405 ..... 15
4-5. Printed Wiring Board — Deck (TCM-220WR4E) Section — TC-WR350Z/WR661 ..... 17
4-6. Schematic Diagram — Deck (TCM-220WR4E) Section — TC-WR350Z/WR661 ..... 19
4-7. Printed Wiring Board — Main Section — ..... 21
4-8. Schematic Diagram — Main Section — ..... 25

SECTION 5. EXPLODED VIEWS
5-1. Case Section ..... 29
5-2. Front Panel Section ..... 30
5-3. TC Mechanism Section 1
(WE405 : TCM-220WR1)
(WR350Z/WR661 : TCM-220WR4E) ..... 31
5-4. TC Mechanism Section 2
(WE405 : TCM-220WR1)
(WR350Z/WR661 : TCM-220WR4E) ..... 32
5-5. TC Mechanism Section 3
(WE405 : TCM-220WR1)
(WR350Z/WR661 : TCM-220WR4E) ..... 33

SECTION 6. ELECTRICAL PARTS LIST ..... 34

# SECTION 1
# GENERAL

## LOCATION OF CONTROL

### Front Panel

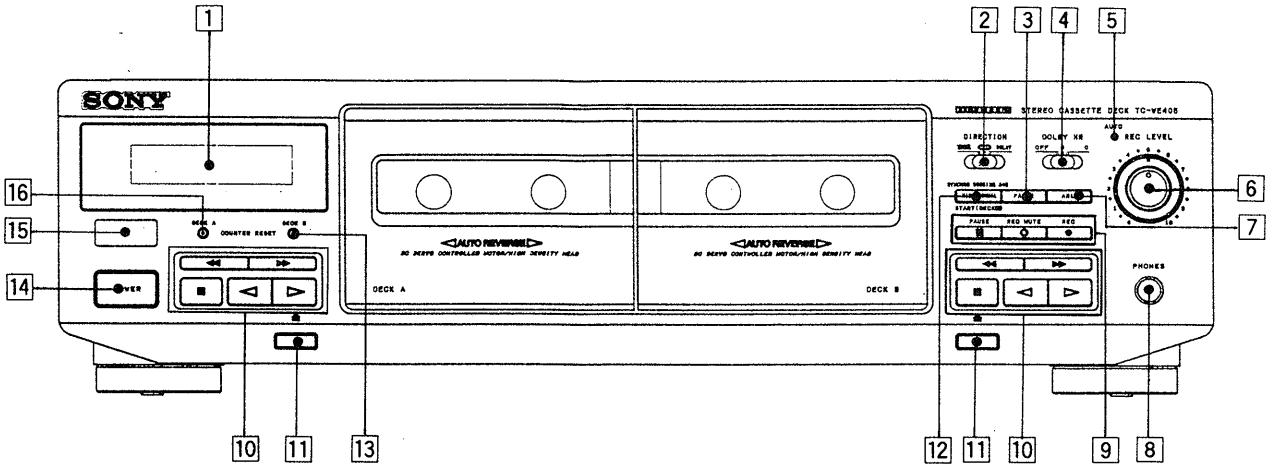


1 Display panel and Indicator tube
2 DIRECTION switch
3 FADER button
4 DOLBY NR (Dolby noise reduction) switch
5 AUTO Indicator
6 REC (recording) LEVEL control
7 ARL button
8 PHONES (headphones) jack (stereo phone jack) (TC-WE405 only)
9 Tape operation buttons
  II PAUSE button
  ○ REC MUTE button
  ● REC button
10 Tape operation buttons
  ■ (stop) button
  ◁ (reverse play) button
  ▷ (forward play) button
  ◀◀ (fast-forwarding) button
  ▶▶ (rewinding) button
11 ⏏ OPEN/CLOSE button
12 SYNCHRO DUBBING A → B button
  HIGH Speed button
  NORMAL Speed button
  START (DECK B) button
13 COUNTER RESET DECK B button
14 POWER switch
15 Remote control sensor
16 COUNTER RESET DECK A button

# SECTION 2
# DISASSEMBLY

**Note :** Follow the disassembly procedure in the numerical order given.

## 2-1. FRONT PANEL

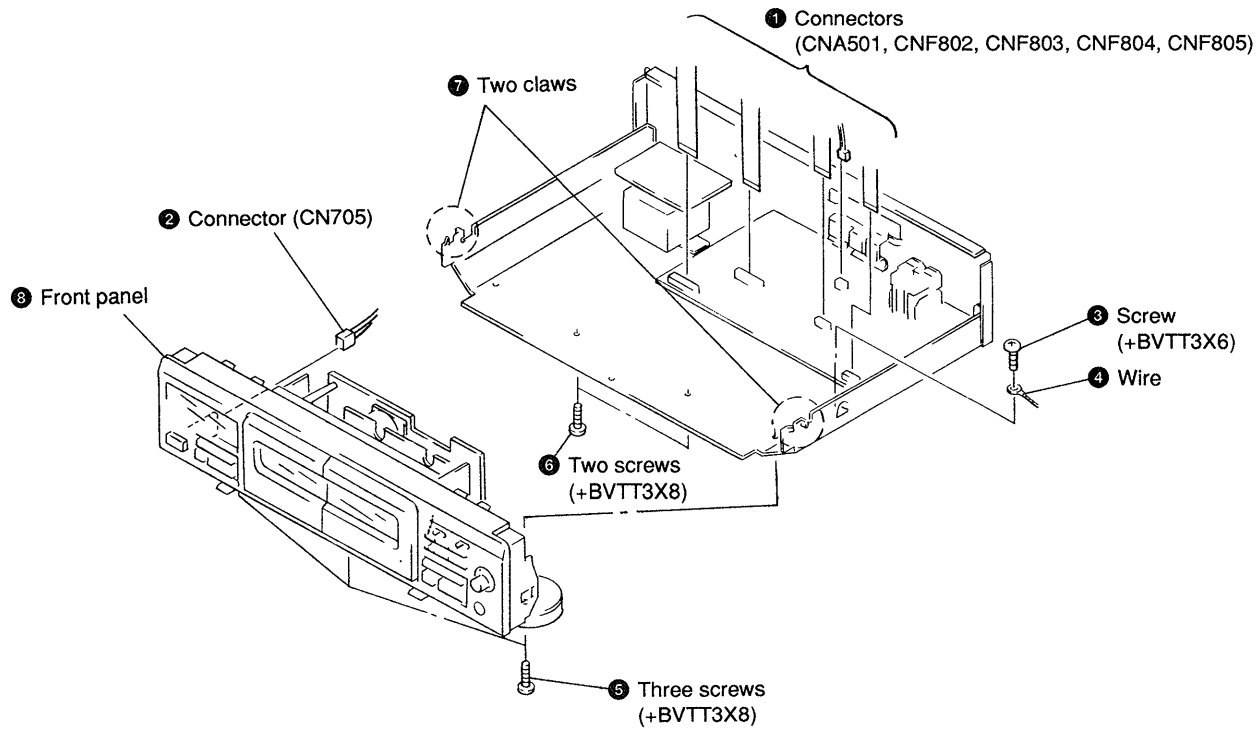


## 2-2. MECHANISM DECK

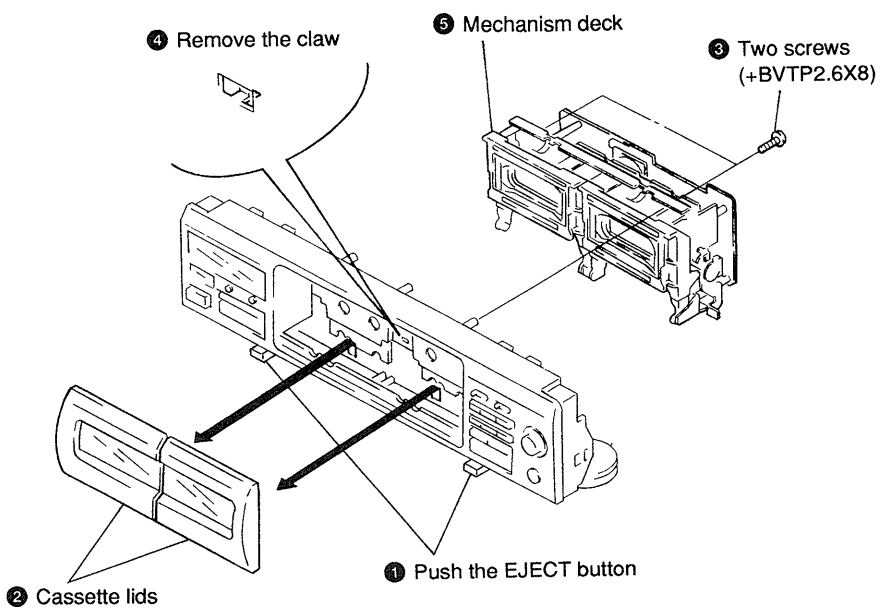

# SECTION 3
# ADJUSTMENTS

## 3-1. MECHANICAL ADJUSTMENTS

### PRECAUTION

1. Clean the following parts with a denatured alcohol-moistened swab :
   record/playback/erase head  pinch roller
   rubber belts  capstan
   idlers
2. Demagnetize the record/playback head with a head demagnetizer.
3. Do not use a magnetized screwdriver for the adjustment.
4. After the adjustments, apply suitable locking compound to the parts adjusted.
5. The adjustments should be performed with the rated power supply voltage unless otherwise noted.

### Torque Measurement

| Torque | Torque meter | Meter reading |
|---|---|---|
| FWD | CQ-102C | 36 to 61g • cm (0.5 – 0.84 oz • inch) |
| FWD back tension | CQ-102C | 2 to 6g • cm (0.02 – 0.08 oz • inch) |
| REV | CQ-102RC | 36 to 61g • cm (0.5 – 0.84 oz • inch) |
| REV back tension | CQ-102RC | 2 to 6g • cm (0.02 – 0.08 oz • inch) |
| FF/REW | CQ-201B | 61 to 143g • cm (0.85 – 1.99 oz • inch) |
| FWD tension | CQ-403A | 100g • cm or more (1.39 oz • inch or more) |
| REV tension | CQ-403R | 100g • cm or more (1.39 oz • inch or more) |

## 3-2. ELECTRICAL ADJUSTMENTS

### PRECAUTION

1. The adjustment should be performed in the publication. (Be sure to male playback adjustment at first.)
2. The adjustments and measurement should be performed for both L-CH and R-CH.
   • Switche position
   DOLBY NR switch : OFF
   DIRECTION switch : ⇆
   • Standard record position :
   Deliver the standard input signal level to input jack and set the REC LEVEL control to obtain the standard output signal level as follows.

— Record Mode —

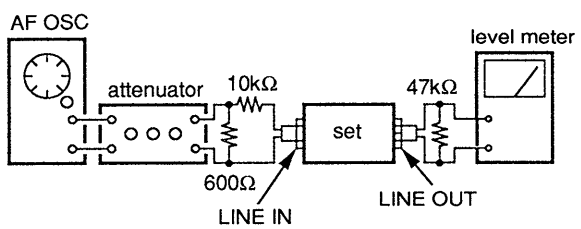


| Input Terminal | LINE IN |
|---|---|
| source impedance | 10kΩ |
| input signal level | 0.5 V (–3.8 dB) |

### Standard Output Level

| Output Terminal | LINE OUT |
|---|---|
| load impedance | 47kΩ |
| output signal level | 0.5 V (–3.8 dB) |

### Test Tape

| Tape | Contents | Use |
|---|---|---|
| P-4-A100 | 10 kH, –10 dB | Azimuth Adjustment |
| P-4-L300 | 315 Hz, 0 dB | PB Level Adjustment |
| WS-48B | 3 kHz, 0 dB | Tape Speed Adjustment |

**0dB = 0.775V**

### Test mode

1. Insert a short-clip into TP801 (2P) and turn ON the power switch.
   At first, all the fluorescent tubes light up, then the system returns to normal display.
2. To release the test mode, remove the short-clip and turn off the power switch.
3. Remove the short-clip after completion of adjustment.

### Record/Playback Head Azimuth Adjustment

**DECK-A** **DECK-B**

**Procedure :**

1. Forward playback Mode

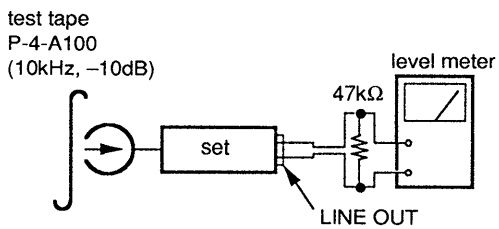


2. Turn the adjustment screw for the maximum output levels. If these levels do not match, turn the adjustment screw until both of output levels match together within 1 dB.

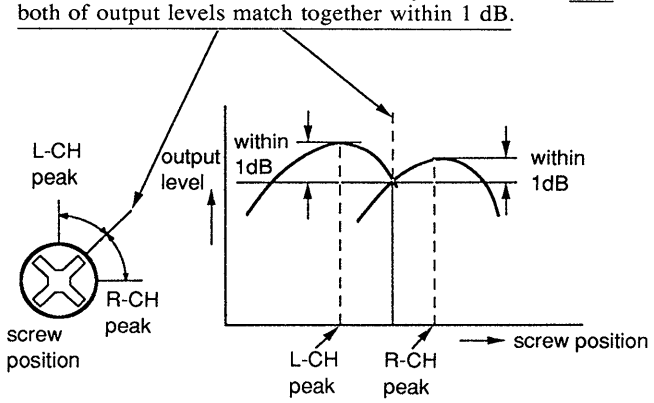

3. Playback Mode

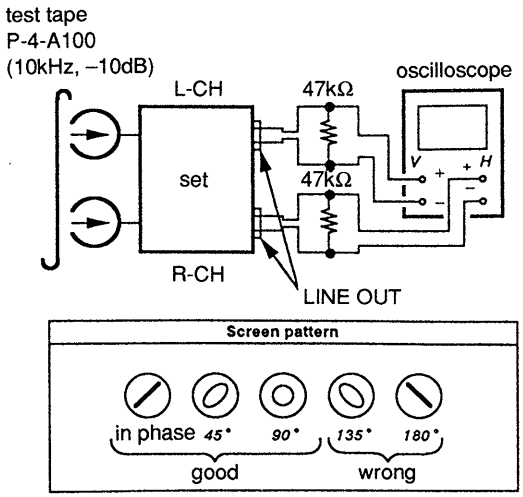


4. Change the reveres playback mode and repeat the steps 1 to 3.
5. After the adjustment, lock the adjustment screws with suitable locking compound.

**Adjustment Location :** — Record/Playback head —

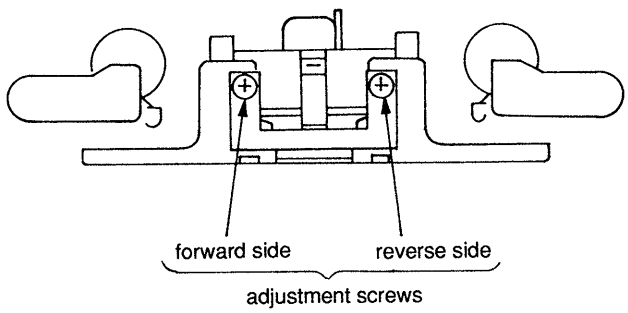


**Tape Speed Adjustment** DECK-B

**Procedure :**
Mode : Forward Playback

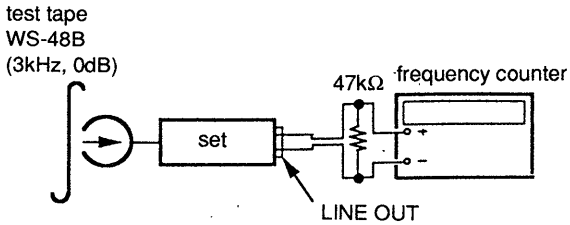


(high speed adjustment)
1. Set to test mode. (See page 6)
2. Insert the WS-48B to the deck B to playback.
3. Set to Forward playback mode.
4. Press the SYNCRO DUBBING button.
5. Adjust RV652 so that the frequency counter reading becomes 6,000 ± 30 Hz.

(Press the SYNCRO DUBBING button again to be set the normal speed mode.)

(normal speed adjustment)
1. Set to FWD playback mode.
2. Adjust RV651 so that the frequency counter reading becomes 3,010 ± 10 Hz.

Frequency difference between FWD mode and REV mode should be within 55 Hz.

**Adjustment Location :** MD board

**Playback Level Adjustment** DECK-A DECK-B

**Procedure :**
Mode : Forward Playback

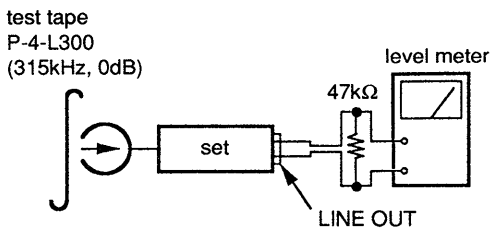


Adjust deck-A is RV311 (L-CH) and RV411 (R-CH), deck-B is RV301 (L-CH) and RV401 (R-CH) so that adjustment within the following adjustment level.

**Adjustment level :**
LINE OUT level : –7.7 dB ± 0.5 dB (301.5 to 338.3 mV)

Level difference between channels : within ± 0.5 dB.

Confirm the LINE OUT level does not change in playback mode while changing the mode from plaback to stop several times.

**AdjustmentLocation :** MD board

## Bias Consumption Current Adjustment DECK-B

(TC-WE405 only)
This adjustment should be performed when replaycing the head assy or the bias oscillating transformer (T341, T441).

**Procedure :**

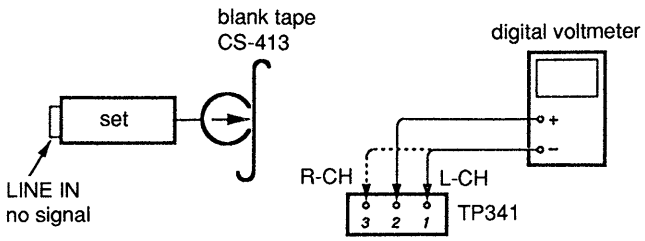


1. Connect the digital voltmeter to test point TP341.
2. Set RV341 (L-CH) and RV441 (R-CH) to mechanical center.
3. Set to FWD record mode..
4. Adjust T341 (L-CH) and T441 (R-CH) so that the digital voltmeter reading becomes minimum.

**Adjustment level :** Maximum 220 mV

**Adjustment level :** MD board

## Record Bias Adjustment DECK-B

**Setting :**
REC LEVEL control : standard record position
(Refer to page 6.)

**Procedure :**
1. Mode : record

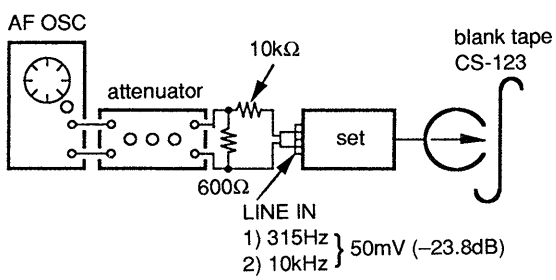


2. Mode : Playback

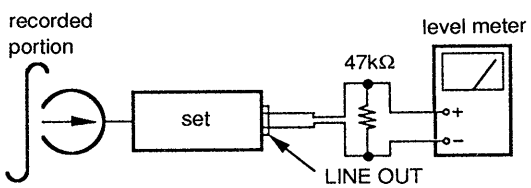


Confirm playback the signal recorded in step1 become adjustment level as follows. If these levels do not adjustment level the RV341 (L-CH) and RV441 (R-CH) to repeat step 1 and 2.

**Adjustment level :**
The playback output of 10 kHz level difference should be ± 0.5 dB.

**AdjustmentLocation :** MD board

## Record Level Adjustment DECK-B

**Setting :**
REC LEVEL control : standard record position
(Refer to page 6.)

**Procedure :**
1. Mode : Record

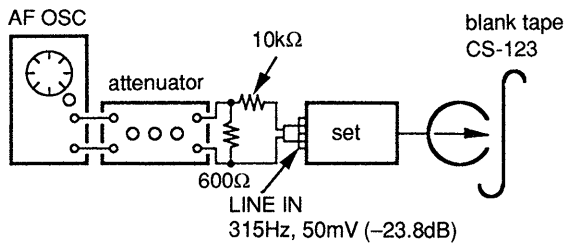


2. Mode : Playback

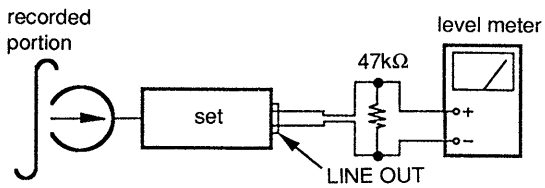


Confirm playback the signal recorded in step 1 become adjustment level as follows.
If necessary, adjust RV101 (L-CH) and RV201 (R-CH) to repeat the step 1 and 2.

**Adjustment level :** –23.8 ± 0.5 dB (47.2 to 53.0 mV)

**Adjustment Location :** MAIN (A) board

— Adjustment Location —

**[MAIN (A) BOARD]** (Component side)

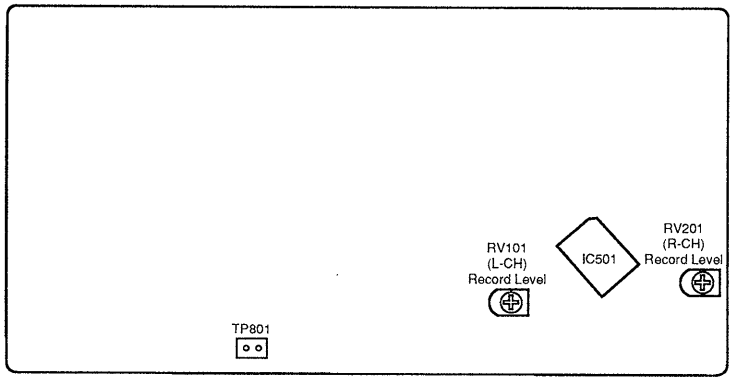


**[MD BOARD]** (Conductor Side)

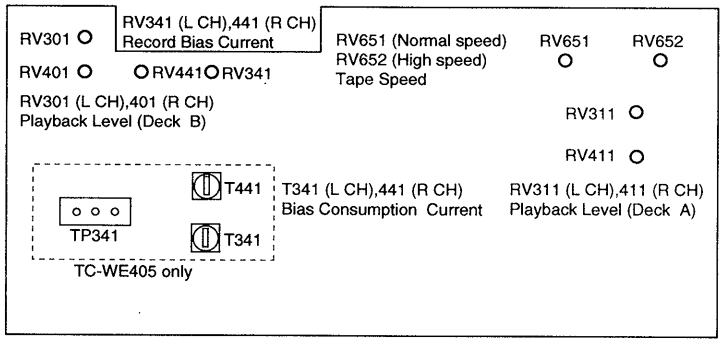

# SECTION 4
# DIAGRAMS

## 4-1. CIRCUIT BOARDS LOCATION

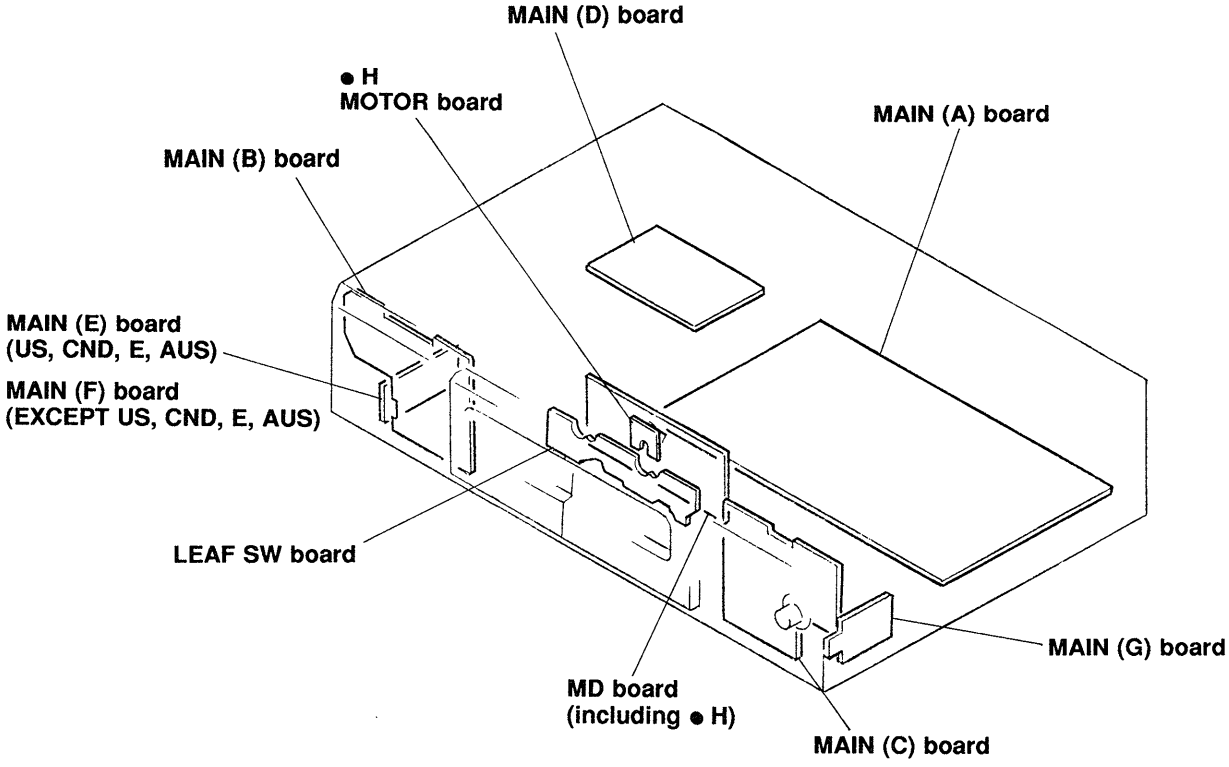


**NOTE :** ● H is including in MD board.

- Abbreviation
  CND : Canadian model.
  AUS : Australian model.

## 4-2. IC PIN FUNCTION

- **IC801 System Controller (M38172M4-156FP)**

| Pin No. | Pin Name | I/O | Function |
|---|---|---|---|
| 1 | REC VOL IN (A/B) | I | REC volume input |
| 2 | METER (L) | I | Meter input Lch |
| 3 | METER (R) | I | Meter input Rch |
| 4 | B HALF | I | Half, REC claw A side and B side detect – DECK B – |
| 5 | A HALF | I | Half detect – DECK A – |
| 6 | A PLAY | I | Play mode on – DECK A – |
| 7 | A SHUT | I | Reel table pulse detect – DECK A – |
| 8 | A SCHMIT | O | |
| 9 | B SHUT | I | Reel table pulse detect – DECK B – |
| 10 | B SCHMIT | O | |
| 11 | B TV | I | TYPE 4 detect L: TYPE 1, 2, H: TYPE 4 – DECK B – |
| 12 | B PLAY | I | H: Play model on – DECK B – |
| 13 | PB SELECT (A/B) | O | PB amp select L: DECK A, H: DECK B |
| 14 | REC/$\overline{PB}$ | O | REC/PB mode select L: PB, H: REC |
| 15 | PB EQ (HIGH/$\overline{NORM}$) | O | PB EQ select L: Norm Speed, H: High Speed |
| 16 | $\overline{REC\ MUTE}$ | O | REC mute L: Mute On, H: Cancel |
| 17 | $\overline{LINE\ MUTE}$ | O | LINE mute L: Mute On, H: Cancel |
| 18 | REC VOL OUT | O | PWM output REC volume control |
| 19 | $\overline{NR}$/MUTE/PASS | O | NR IN/PASS mute select L: NR, H: PASS, Input: MUTE |
| 20 | $\overline{B\ BIAS}$ | O | L: Bias On, H: Off |
| 21 | POWER IN (2) | I | Secondary power detect L: Power Off, H: On |
| 22 | POWER IN (1) | I | Primary power detect L: Power Off, H: On |
| 23 | —— | O | Open |
| 24 | SIRCS | I | Remote control receiver |
| 25 | POWER OUT | O | L: Power hold |
| 26 | —— | I | Open (Connected to ground) |
| 27 | RESET | I | RESET |
| 28 | —— | – | Open (Connected to ground) |
| 29 | —— | – | Open |
| 30 | X IN | I | 4 MHz clock input |
| 31 | X OUT | O | 4 MHz clock output |
| 32 | Vss | – | Ground |
| 33 | $\overline{B\ RELAY}$ | O | Relay select H: Off, L: On |
| 34 | $\overline{TEST}$ | I | L: Test mode |
| 35 | —— | O | Open |
| 36 | —— | O | |
| 37 | —— | O | |
| 38 | —— | O | |
| 39 | —— | O | |
| 40 | —— | O | |

| Pin No. | Pin Name | I/O | Function |
|---|---|---|---|
| 41 | V1 | O | FL Segment signal output 16 |
| 42 | S15 | O | FL Segment signal output 15 |
| 43 | S14 | O | FL Segment signal output 14 |
| 44 | S13 | O | FL Segment signal output 13 |
| 45 | S12 | O | FL Segment signal output 12 |
| 46 | S11 | O | FL Segment signal output 11 |
| 47 | S10 | O | FL Segment signal output 10 |
| 48 | S9 | O | FL Segment signal output 9 |
| 49 | S8 | O | FL Segment signal output 8 |
| 50 | S7 | O | FL Segment signal output 7 |
| 51 | S6 | O | FL Segment signal output 6 |
| 52 | S5 | O | FL Segment signal output 5 |
| 53 | S4 | O | FL Segment signal output 4 |
| 54 | S3 | O | FL Segment signal output 3 |
| 55 | S2 | O | FL Segment signal output 2 |
| 56 | S1 | O | FL Segment signal output 1 |
| 57 | G1 | O | FL Grid signal output 1 |
| 58 | G2 | O | FL Grid signal output 2 |
| 59 | G3 | O | FL Grid signal output 3 |
| 60 | G4 | O | FL Grid signal output 4 |
| 61 | G5 | O | FL Grid signal output 5 |
| 62 | G6 | O | FL Grid signal output 6 |
| 63 | G7 | O | FL Grid signal output 7 |
| 64 | —— | O | Open |
| 65 | —— | O | |
| 66 | CAP M ($\overline{H}$/N) | O | Capstan motor L: High Speed, H: Low Speed |
| 67 | CAP M ($\overline{ON}$/OFF) | O | Capstan motor L: On, H: Off |
| 68 | TRG ($\overline{H}$/L) | O | Trigger motor H: Low, L: High |
| 69 | A-TRG | O | Trigger motor control – DECK A – |
| 70 | B-TRG | O | Trigger motor control – DECK B – |
| 71 | —— | O | Open |
| 72 | ARL (LED) | O | ARL LED control L: Off, H: On |
| 73 | Vcc | – | +5V |
| 74 | VEE | – | Pull down voltage –24V |
| 75 | AVss | – | AD voltage 0V (Ground) |
| 76 | VREF | – | AD Reference voltage +5V |
| 77 | KEY4 | I | Key input (Arew, Aff, Breset, Circle, Relay, Oneway) |
| 78 | KEY3 | I | Key input (Astp, Afwd, Arev, Areset) |
| 79 | KEY2 | I | Key input (Brew, Bff, Brec, Bpause, Brec_mute, Dub H/N) |
| 80 | KEY1 | I | Key input (Bstp, Bfwd, Brev, ARL, FADER) |

- Abbreviation
  FL : FLUORESCENT INDICATOR TUBE

## 4-3. PRINTED WIRING BOARD — DECK (TCM-220WR1) SECTION — TC-WE405

• See page 10 for Circuit Boards Location.

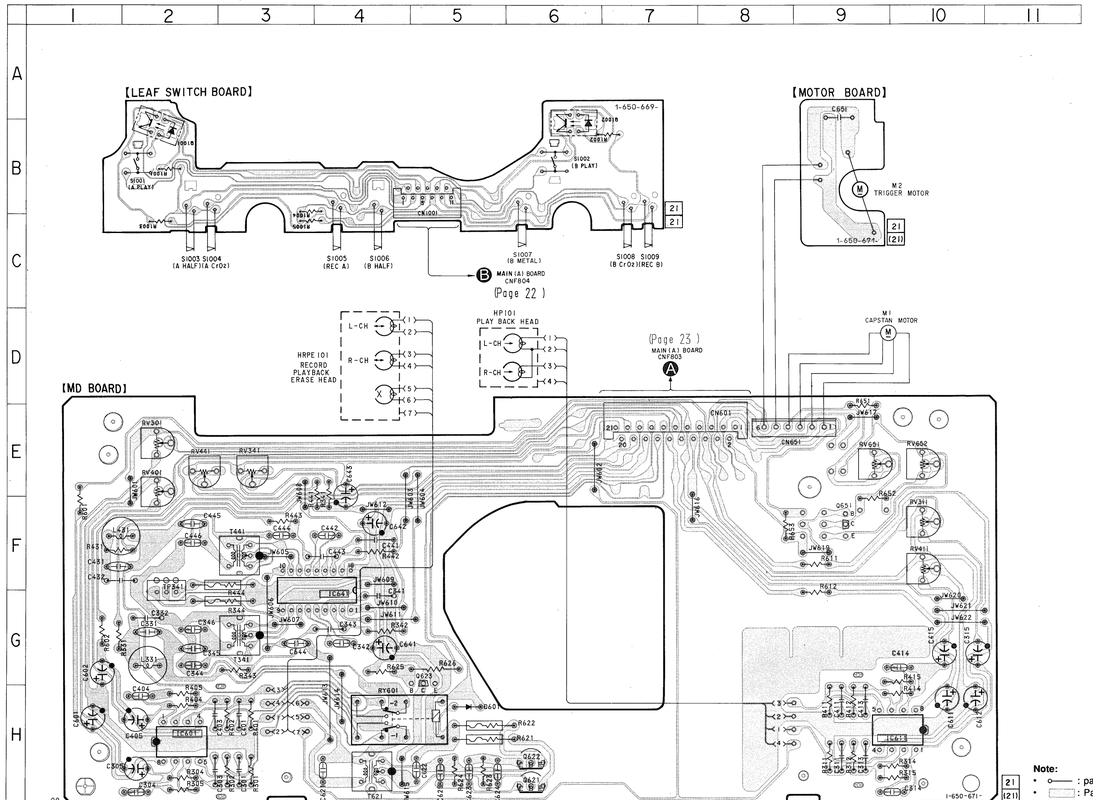


• Semiconductor Location

| Ref. No. | Location |
|---|---|
| D601 | H-5 |
| IC601 | H-2 |
| IC611 | H-10 |
| IC641 | G-4 |
| Q621 | H-6 |
| Q622 | H-6 |
| Q623 | G-5 |
| Q651 | F-9 |
| Q1001 | B-2 |
| Q1002 | B-6 |

Note:
• ○—— : parts extracted from the component side.
• ▭ : Pattern from the side which enable seeing.





## 4-4. SCHEMATIC DIAGRAM — DECK (TCM-220WR1) SECTION — TC-WE405

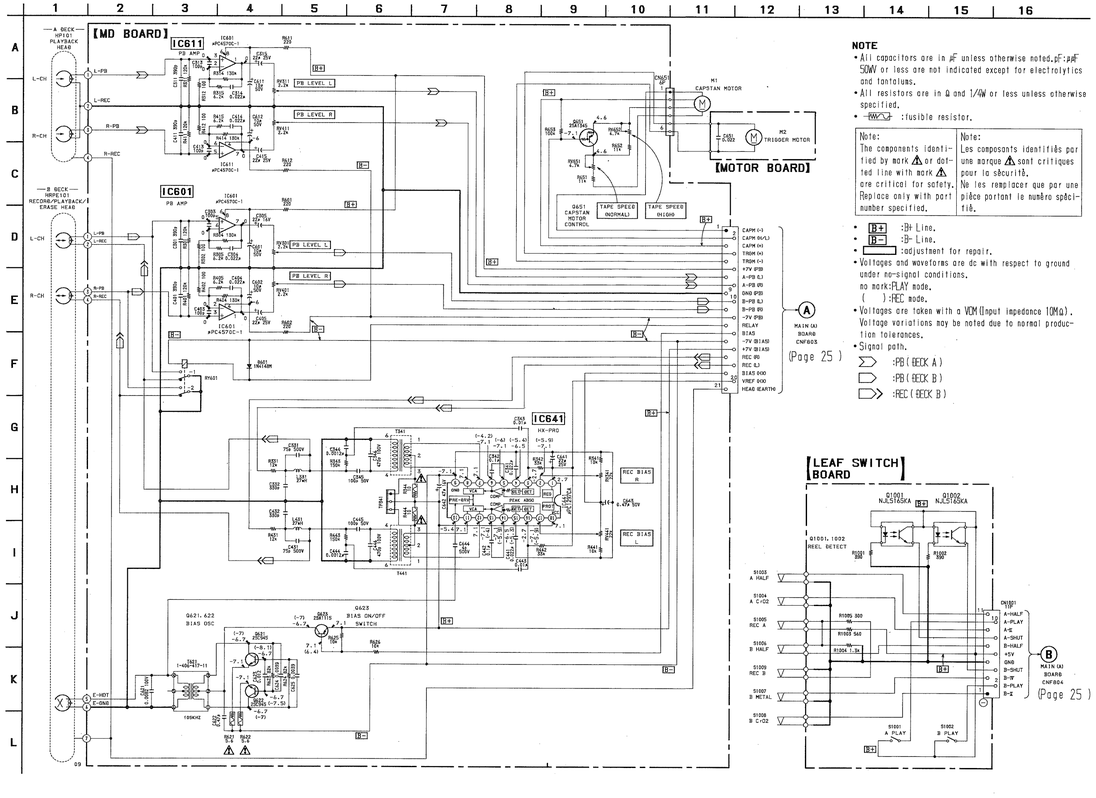


NOTE
• All capacitors are in μF unless otherwise noted. pF: μμF 50WV or less are not indicated except for electrolytics and tantaluns.
• All resistors are in Ω and 1/4W or less unless otherwise specified.
• ⚠ : fusible resistor.

| Note: | Note: |
|---|---|
| The components identified by mark ⚠ or dotted line with mark ⚠ are critical for safety. Replace only with part number specified. | Les composants identifiés par une marque ⚠ sont critiques pour la sécurité. Ne les remplacer que par une pièce portant le numéro spécifié. |

• B+ : B+ Line.
• B− : B− Line.
• ▭ : adjustment for repair.
• Voltages and waveforms are dc with respect to ground under no-signal conditions.
no mark: PLAY mode.
( ): REC mode.
• Voltages are taken with a VCM (Input impedance 10MΩ). Voltage variations may be noted due to normal production tolerances.
• Signal path.
: PB (DECK A)
: PB (DECK B)
: REC (DECK B)

## 4-5. PRINTED WIRING BOARD — DECK (TCM-220WR4E) SECTION — TC-WR350Z/WR661

• See page 10 for Circuit Boards Location.

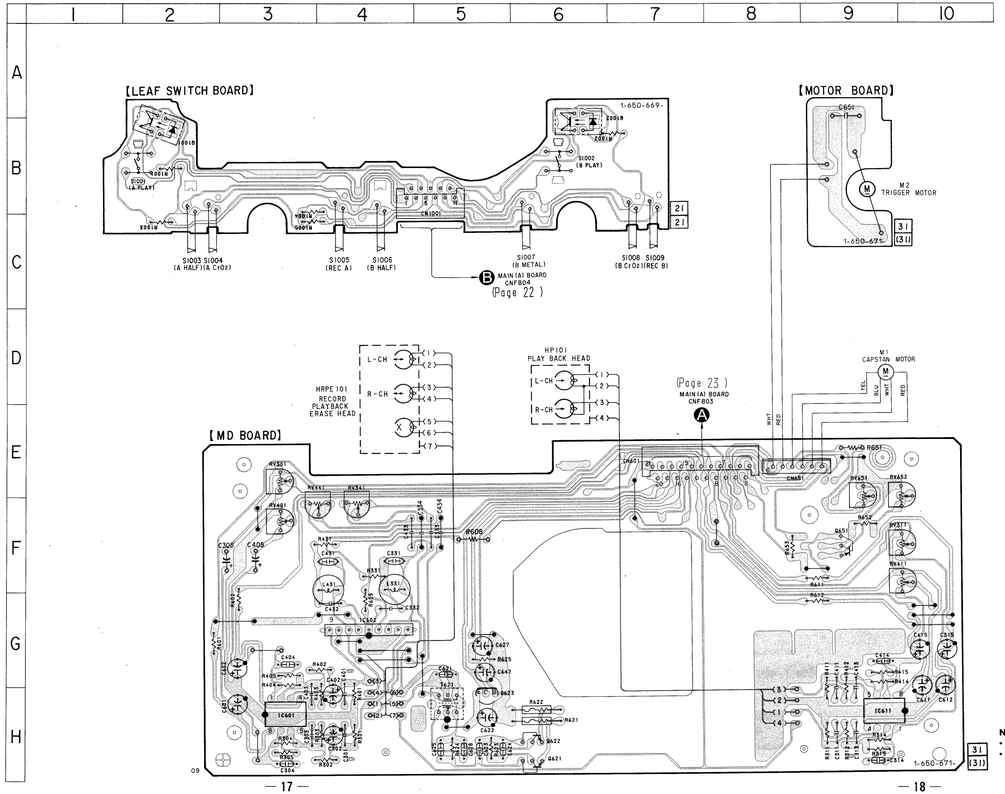


Note:
- ○—— : parts extracted from the component side.
- ▒▒▒ : Pattern from the side which enable seeing.

• Semiconductor Location

| Ref. No. | Location |
|---|---|
| IC601 | H-3 |
| IC602 | G-4 |
| IC611 | H-9 |
| Q621 | H-6 |
| Q622 | H-6 |
| Q623 | H-5 |
| Q651 | F-9 |
| Q1001 | B-2 |
| Q1002 | B-6 |

## 4-6. SCHEMATIC DIAGRAM — DECK (TCM-220WR4E) SECTION — TC-WR350Z/WR661

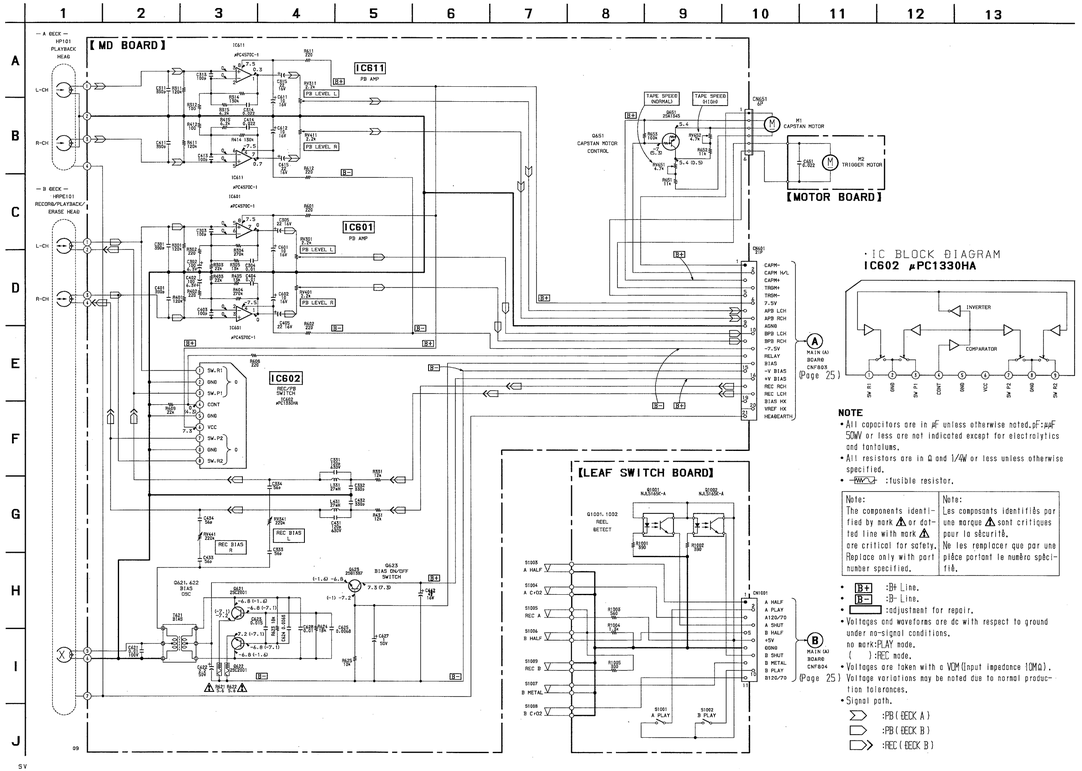


• IC BLOCK DIAGRAM
IC602 μPC1330HA




**NOTE**

- All capacitors are in μF unless otherwise noted. pF: μμF 50WV or less are not indicated except for electrolytics and tantalums.
- All resistors are in Ω and 1/4W or less unless otherwise specified.
- ~~FW~~ : fusible resistor.

| Note: | Note: |
|---|---|
| The components identified by mark ⚠ or dotted line with mark ⚠ are critical for safety. Replace only with part number specified. | Les composants identifiés par une marque ⚠ sont critiques pour la sécurité. Ne les remplacer que par une pièce portant le numéro spécifié. |

- B+ : B+ Line.
- B- : B- Line.
- ▭ : adjustment for repair.
- Voltages and waveforms are dc with respect to ground under no-signal conditions.
  no mark: PLAY mode.
  ( ) : REC mode.
- Voltages are taken with a VOM (Input impedance 10MΩ).
- Voltage variations may be noted due to normal production tolerances.
- Signal path.
  - ▷ : PB (DECK A)
  - ▷ : PB (DECK B)
  - ▷ : REC (DECK B)

## 4-7. PRINTED WIRING BOARD — MAIN SECTION — TC-WR350Z/WR661

• See page 10 for Circuit Boards Location.

• **Semiconductor Location**

| Ref. No. | Location |
|---|---|
| D101 | D-7 |
| D201 | D-7 |
| D501 | B-7 |
| D701 | C-12 |
| D702 | C-12 |
| D703 | B-12 |
| D704 | B-12 |
| D705 | B-12 |
| D706 | B-12 |
| D707 | C-12 |
| D708 | A-9 |
| D709 | B-9 |
| D710 | C-10 |
| D711 | B-9 |
| D712 | B-12 |
| D713 | G-12 |
| D714 | D-12 |
| D715 | D-11 |
| D716 | D-13 |
| D718 | C-8 |
| D901 | G-16 |
| IC501 | E-3 |
| IC502 | B-8 |
| IC701 | B-10 |
| IC801 | F-9 |
| IC802 | F-5 |
| IC803 | G-8 |
| IC804 | E-12 |
| IC806 | D-6 |
| IC901 | C-17 |
| Q101 | D-4 |
| Q102 | B-6 |
| Q201 | C-2 |
| Q202 | B-5 |
| Q501 | B-7 |
| Q701 | A-10 |
| Q702 | A-9 |
| Q703 | A-12 |
| Q704 | B-11 |
| Q705 | B-10 |
| Q706 | A-12 |
| Q707 | D-12 |
| Q708 | D-12 |
| Q801 | F-8 |
| Q802 | D-12 |
| Q803 | D-11 |
| Q804 | D-12 |
| Q805 | E-12 |
| Q806 | E-12 |
| Q807 | E-7 |
| Q808 | G-8 |

**Note:**

- ⟜ : parts extracted from the component side.
- ■ : parts mounted on the conductor side.
- △ : internal component.
- ▒▒ : Pattern from the side which enable seeing.
- Abbreviation
  CND : Canadian model.
  AUS : Australian model.

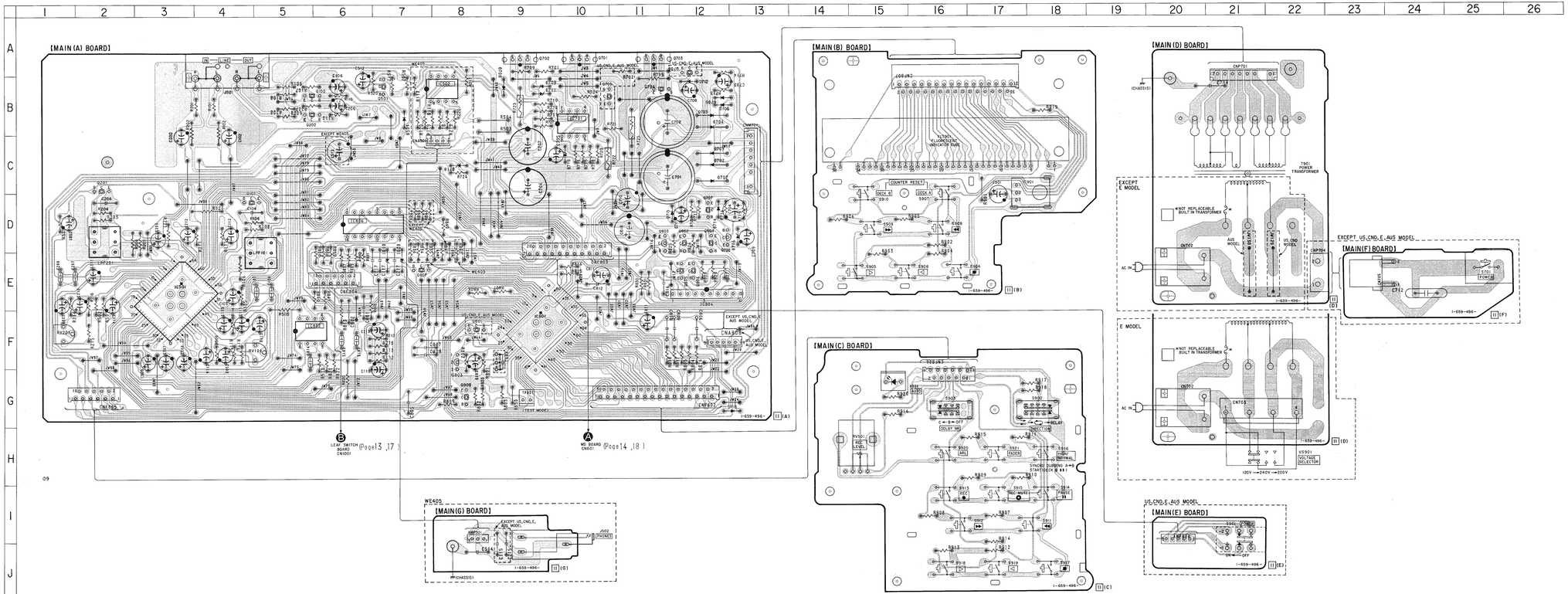

## 4-8. SCHEMATIC DIAGRAM — DECK (TCM-220WR4E) SECTION — TC-WR350Z/WR661

• See page 11 for IC Pin function. (IC801)

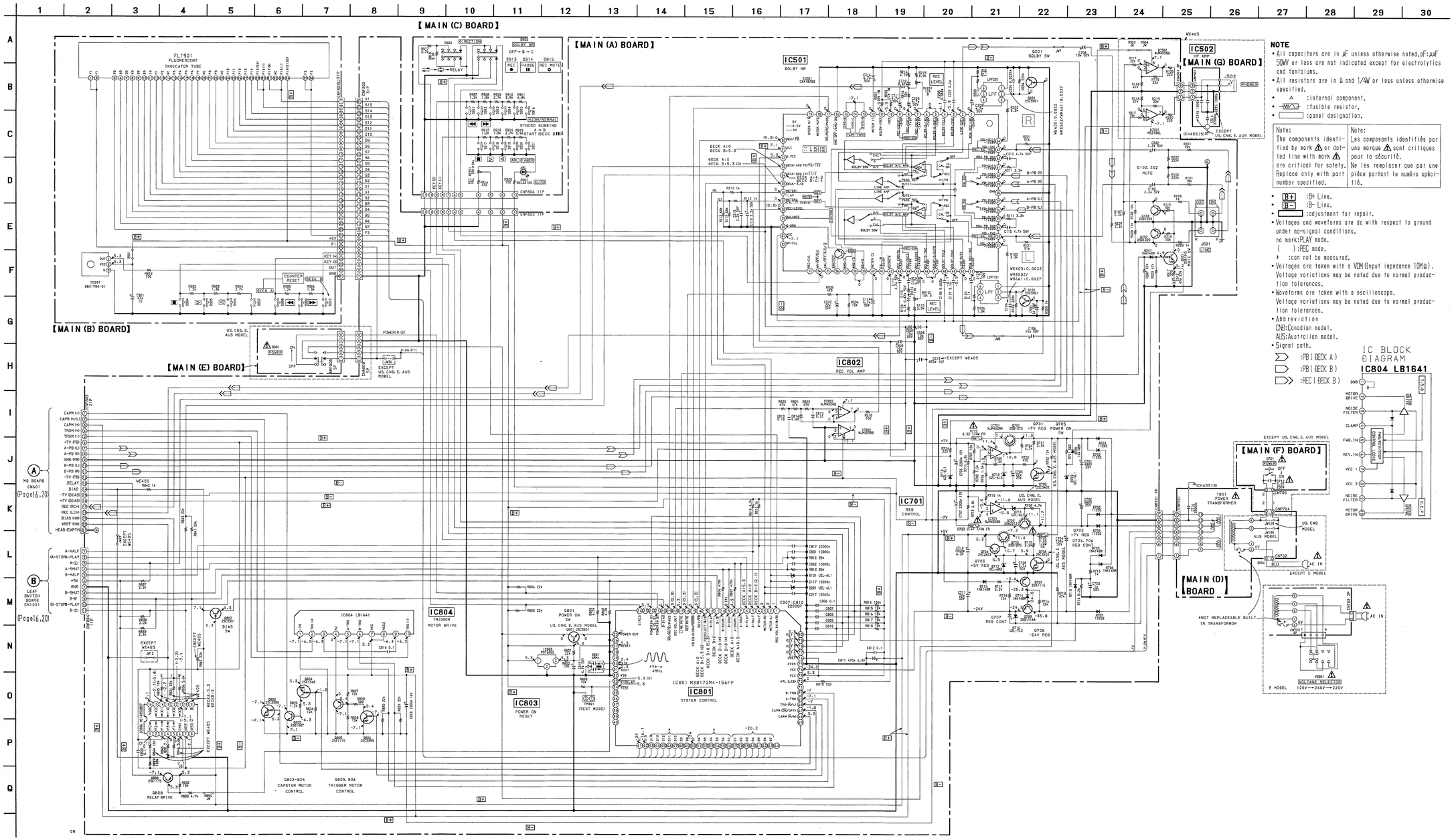

# SECTION 5
# EXPLODED VIEWS

NOTE:
- Items marked " * " are not stocked since they are seldom required for routine service. Some delay should be anticipated when ordering these items.
- The mechanical parts with no reference number in the exploded views are not supplied.
- Hardware (# mark) list and accessories and packing materials are given in the last of this parts list.

- Abbreviation
  CND : Canadian model
  G : German model
  IT : Italian model
  SP : Singapore model
  MY : Malaysia model
  AUS : Australian model
  CH : Chinese model

The components identified by mark ⚠ or dotted line with mark ⚠ are critical for safety.
Replace only with part number specified.

Les composants identifiés par une marque ⚠ sont critiques pour la sécurité.
Ne les remplacer que par une piéce portant le numéro spécifié.

## 5-1. CASE SECTION

▲A: MAIN (A) BOARD
▲D: MAIN (D) BOARD

**NOTE:** ▲A, ▲B, ▲C, ▲D, ▲E, ▲F and ▲G are supplied as MAIN board.

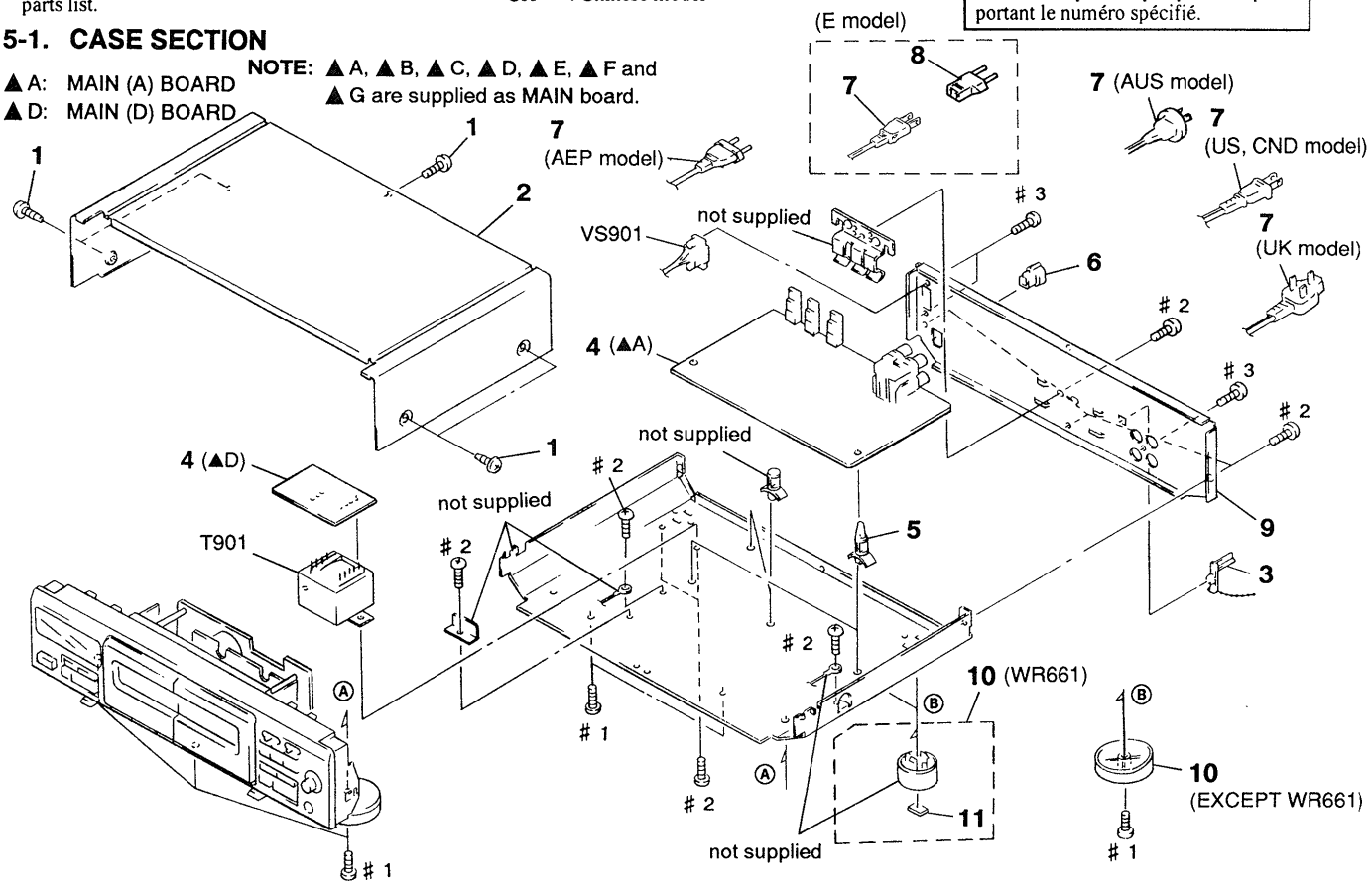


| Ref. No. | Part No. | Description | Remark |
|---|---|---|---|
| 1 | 3-704-366-01 | SCREW (CASE) (M3X8) | |
| * 2 | 3-931-432-01 | CASE (410726) | |
| 3 | 4-956-370-12 | BAND, PLUG FIXED (WE405:UK, AUS) | |
| * 4 | A-2007-484-A | MAIN BOARD, COMPLETE (WR350Z/WR661:US, CND) | |
| * 4 | A-2007-486-A | MAIN BOARD, COMPLETE (WR661:AEP, UK, G, IT) | |
| * 4 | A-2007-487-A | MAIN BOARD, COMPLETE (WR661:E) | |
| * 4 | A-2007-488-A | MAIN BOARD, COMPLETE (WE405:AEP, CH, MY, SP, UK, G) | |
| * 4 | A-2007-489-A | MAIN BOARD, COMPLETE (WE405:E) | |
| * 4 | A-2007-490-A | MAIN BOARD, COMPLETE (WE405:AUS) | |
| * 4 | A-2007-546-A | MAIN BOARD, COMPLETE (WE405:US, CND) | |
| * 5 | 3-346-265-31 | HOLDER, PC BOARD | |
| * 6 | 3-703-244-00 | BUSHING (2104), CORD (WE405:AEP, CH, MY, SP, UK, G, AUS/WR661:AEP, UK, G, IT) | |
| 6 | 3-703-571-11 | BUSHING (S) (4516), CORD (WE405:US, CND, E/WR350Z/WR661:US, CND, E) | |
| ⚠7 | 1-558-945-21 | CORD, POWER (POLAR. SPT-1) (WE405:US, CND/WR350Z/WR661:US, CND) | |
| ⚠7 | 1-575-651-21 | CORD, POWER (WE405:AEP, CH, MY, SP, G/WR661:AEP, G, IT) | |
| ⚠7 | 1-696-027-11 | CORD, POWER (WE405:E/WR661:E) | |
| ⚠7 | 1-696-845-11 | CORD, POWER (WE405:AUS) | |
| ⚠7 | 1-769-639-11 | CORD, POWER (WR661:UK) | |
| ⚠7 | 1-751-523-11 | CORD, POWER (WE405:UK) | |
| ⚠8 | 1-569-007-11 | ADAPTER, CONVERSION 2P (WE405:E/WR661:E) | |

| Ref. No. | Part No. | Description | Remark |
|---|---|---|---|
| * 9 | 3-931-433-01 | PANEL, BACK (WE405:US) | |
| * 9 | 3-931-433-11 | PANEL, BACK (WE405:CND) | |
| * 9 | 3-931-433-21 | PANEL, BACK (WE405:AEP, CH, MY, SP, G) | |
| * 9 | 3-931-433-31 | PANEL, BACK (WE405:UK) | |
| * 9 | 3-931-433-41 | PANEL, BACK (WE405:E) | |
| * 9 | 3-931-433-51 | PANEL, BACK (WE405:AUS) | |
| * 9 | 3-931-436-01 | PANEL, BACK (WR661:US) | |
| * 9 | 3-931-436-11 | PANEL, BACK (WR661:CND) | |
| * 9 | 3-931-436-21 | PANEL, BACK (WR661:AEP, G, IT) | |
| * 9 | 3-931-436-31 | PANEL, BACK (WR661:UK) | |
| * 9 | 3-931-436-41 | PANEL, BACK (WR661:E) | |
| * 9 | 3-934-887-01 | PANEL, BACK (WR350Z:US) | |
| * 9 | 3-934-887-11 | PANEL, BACK (WR350Z:CND) | |
| 10 | X-3371-405-1 | FOOT (SMALL) ASSY (WR661) | |
| 10 | X-3371-435-1 | FOOT ASSY (F50150S) (WE405:AEP, CH, MY, SP, UK, G, E, AUS) | |
| 10 | X-3371-436-1 | FOOT ASSY (F50145S) (WE405:US, CND/WR350Z) | |
| 11 | 4-977-358-01 | CUSHION (8X12.5) (WE405/WR350Z) | |
| ⚠T901 | 429-387-11 | TRANSFORMER, POWER (WE405:US, CND/WR350Z/WR661:US, CND) | |
| ⚠T901 | 429-388-11 | TRANSFORMER, POWER (WE405:AEP, CH, MY, SP, UK, G, AUS/WR661:AEP, UK, G, IT) | |
| ⚠T901 | 429-389-11 | TRANSFORMER, POWER (WE405:E/WR661:E) | |
| ⚠VS901 | 692-155-11 | SELECTOR, POWER VOLTAGE (WE405:E/WR661:E) | |

## 5-2. FRONT PANEL SECTION

▲B: MAIN (B) BOARD
▲C: MAIN (C) BOARD
▲E: MAIN (E) BOARD (US, CND, E, AUS model)
▲F: MAIN (F) BOARD (EXCEPT US, CND, E, AUS model)
▲G: MAIN (G) BOARD

NOTE: ▲A, ▲B, ▲C, ▲D, ▲E, ▲F and ▲G are supplied as MAIN board.

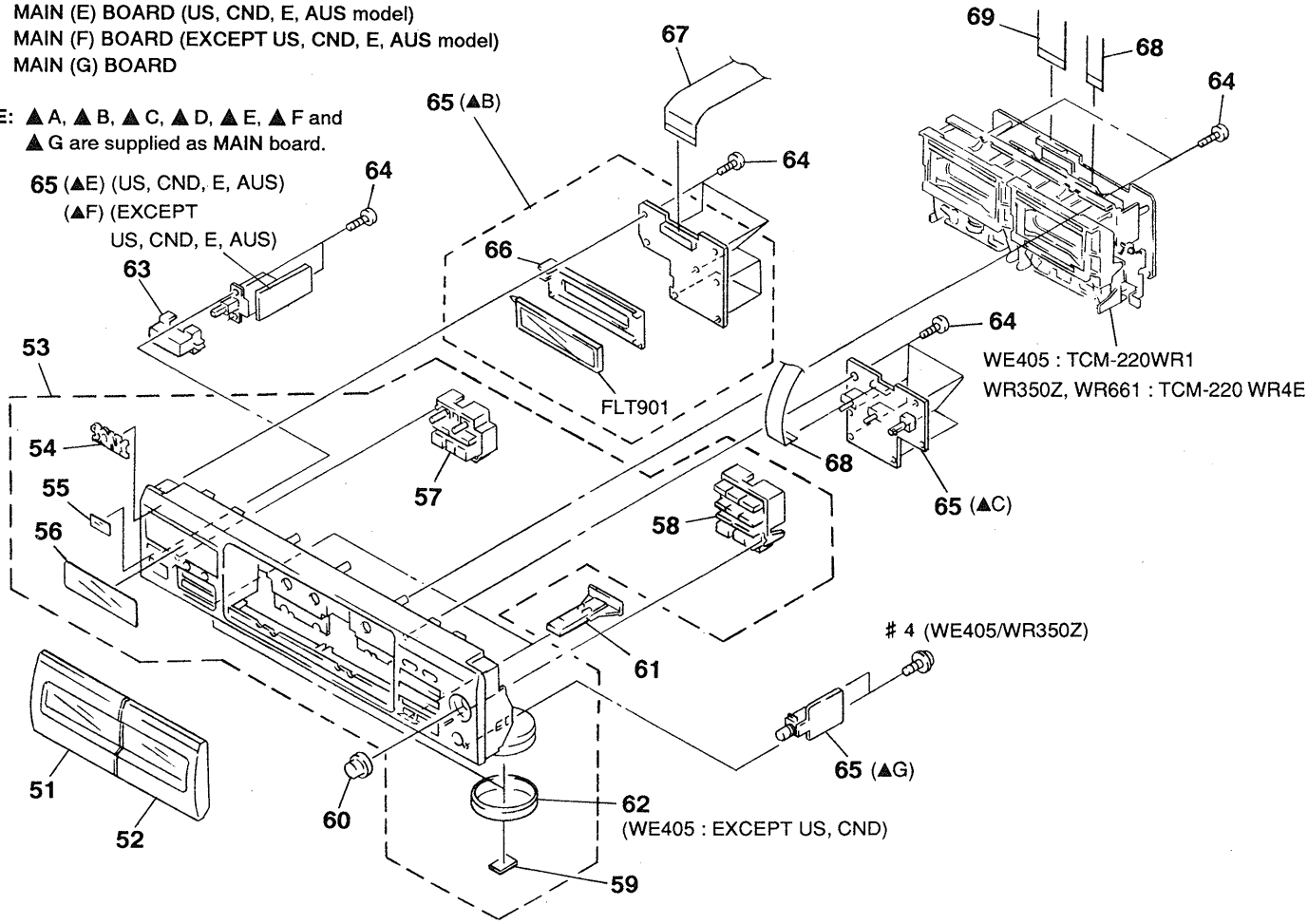


| Ref. No. | Part No. | Description | Remark |
|---|---|---|---|
| 51 | X-3371-403-1 | LID (A) ASSY, CASSETTE | |
| 52 | X-3371-404-1 | LID (B) ASSY, CASSETTE | |
| 53 | X-3371-400-1 | PANEL ASSY, FRONT (WR350Z) | |
| 53 | X-3371-401-1 | PANEL ASSY, FRONT (WE405:US, CND) | |
| 53 | X-3371-402-1 | PANEL ASSY, FRONT (WR661) | |
| 53 | X-3371-969-1 | PANEL ASSY, FRONT (WE405:AEP, CH, MY, SP, UK, G, E, AUS) | |
| 54 | 4-963-404-21 | EMBLEM (5-A), SONY | |
| 55 | 3-931-435-01 | WINDOW (R) | |
| 56 | 3-931-434-01 | WINDOW (M) | |
| 57 | 3-931-425-01 | BUTTON (A) | |
| 58 | 3-931-426-01 | BUTTON (B) | |
| 59 | 4-977-358-01 | CUSHION (8X12.5) | |
| 60 | 3-931-430-11 | KNOB (REC) | |
| 61 | 3-931-427-01 | BUTTON (EJ) | |
| 62 | 4-977-593-11 | RING (DIA 50), ORNAMENTAL (WE405:AEP, CH, MY, SP, UK, G, E, AUS) | |

| Ref. No. | Part No. | Description | Remark |
|---|---|---|---|
| 63 | 3-931-429-01 | BUTTON (POWER) | |
| 64 | 4-951-620-01 | SCREW (2.6X8), +BVTP | |
| * 65 | A-2007-484-A | MAIN BOARD, COMPLETE (WR350Z/WR661:US, CND) | |
| * 65 | A-2007-486-A | MAIN BOARD, COMPLETE(WR661:AEP, UK, G, IT) | |
| * 65 | A-2007-487-A | MAIN BOARD, COMPLETE (WR661:E) | |
| * 65 | A-2007-488-A | MAIN BOARD, COMPLETE (WE405:AEP, CH, MY, SP, UK, G) | |
| * 65 | A-2007-489-A | MAIN BOARD, COMPLETE (WE405:E) | |
| * 65 | A-2007-490-A | MAIN BOARD, COMPLETE (WE405:AUS) | |
| * 65 | A-2007-546-A | MAIN BOARD, COMPLETE (WE405:US, CND) | |
| * 66 | 3-931-428-01 | HOLDER (FL) | |
| 67 | 1-773-332-11 | WIRE (FLAT TYPE) (31 CORE) | |
| 68 | 1-769-950-11 | WIRE (FLAT TYPE) (11 CORE) | |
| 69 | 1-773-153-11 | WIRE (FLAT TYPE) (21 CORE) | |
| FLT901 | 1-517-491-11 | INDICATOR TUBE, FLUORESCENT | |

## 5-3. TC MECHANISM SECTION 1
(WE405: TCM-220WR1
WR350Z, WR661: TCM-220WR4E)

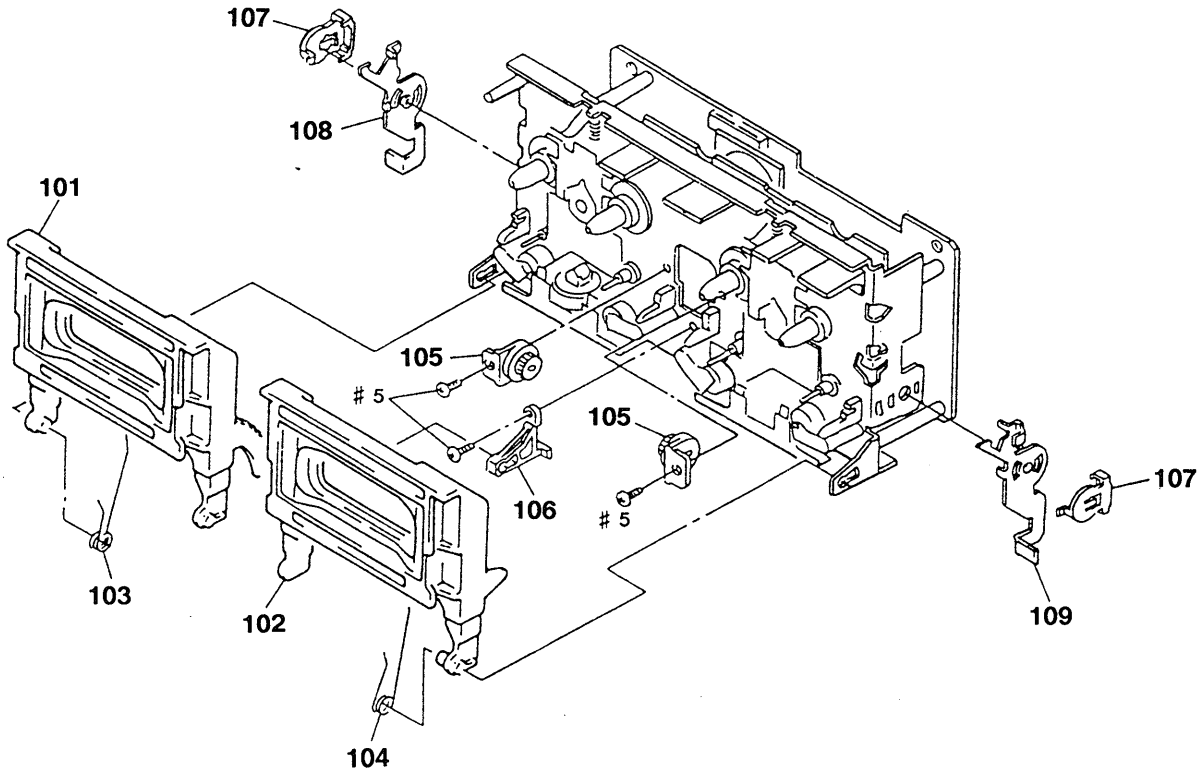


| Ref. No. | Part No. | Description | Remark |
|---|---|---|---|
| 101 | X-4945-690-1 | HOLDER (L) ASSY, CASSETTE | |
| 102 | X-4945-691-1 | HOLDER (R) ASSY, CASSETTE | |
| 103 | 4-959-231-11 | SPRING (L), TORSION | |
| 104 | 4-959-232-11 | SPRING (R), TORSION | |
| 105 | 3-354-963-01 | DAMPER | |
| * 106 | 4-980-439-01 | FULCRUM, HOLDER | |
| 107 | 3-354-957-01 | JOINT (LOCK LEVER) | |
| * 108 | 3-354-953-01 | LEVER (LOCK LEVER L) | |
| * 109 | 3-354-954-01 | LEVER (LOCK LEVER R) | |

## 5-4. TC MECHANISM SECTION 2
## (WE405: TCM-220WR1
## WR350Z, WR661: TCM-220WR4E)

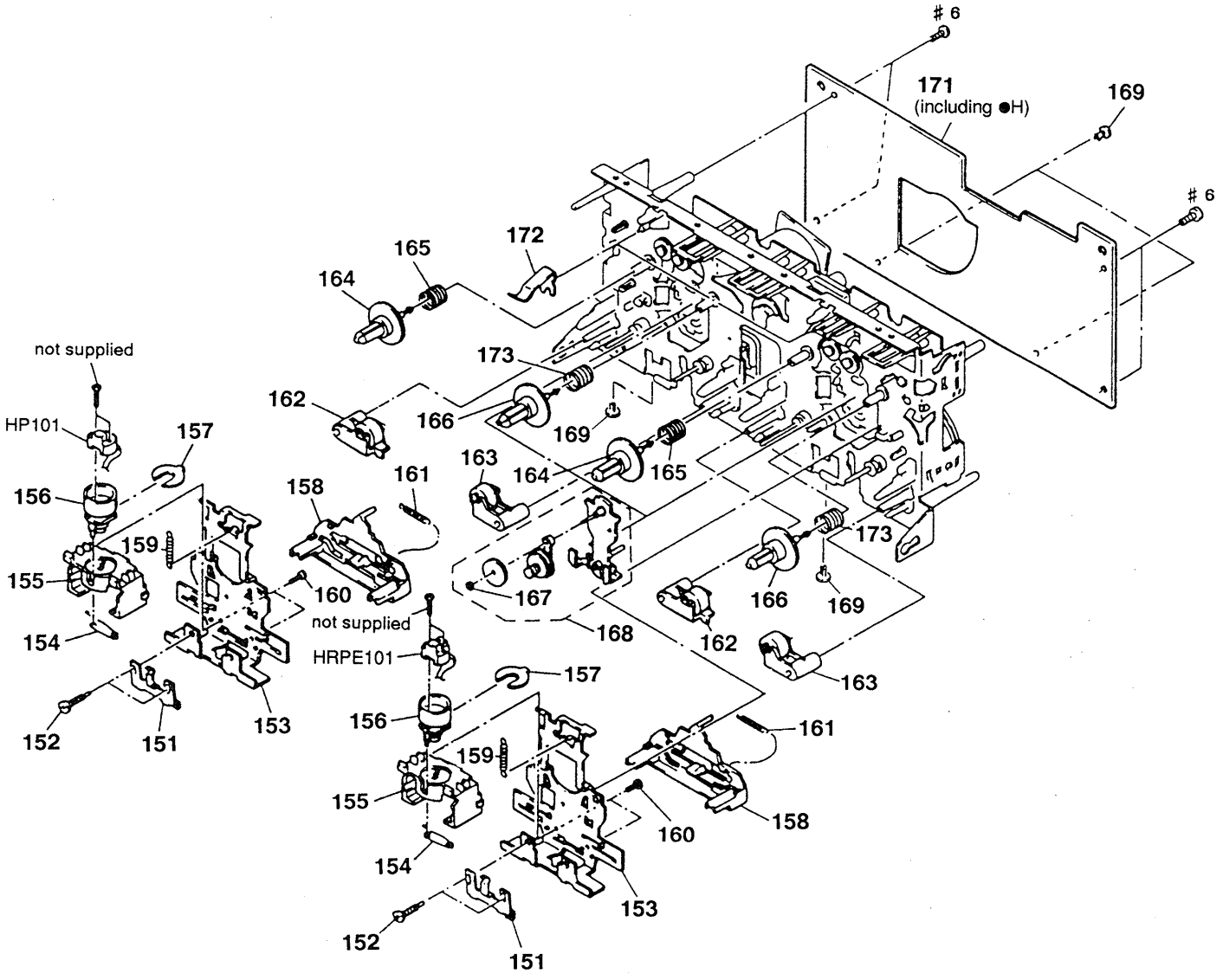


| Ref. No. | Part No. | Description | Remark |
|---|---|---|---|
| 151 | 3-908-560-01 | SPRING, AZIMUTH ADJUSTMENT | |
| 152 | 3-919-684-01 | SCREW, AZIMUTH ADJUSTMENT | |
| * 153 | X-3367-584-2 | SLIDER (HEAD) ASSY | |
| 154 | 3-908-556-01 | SPRING, HEAD TOGGLE | |
| 155 | 3-908-558-02 | FITTING BLOCK, HEAD | |
| 156 | 3-908-557-02 | ROTARY BLOCK, HEAD | |
| * 157 | 3-908-559-01 | STOPPER, AZIMUTH | |
| 158 | 3-908-555-01 | SLIDER (REV SLIDER) | |
| 159 | 3-917-143-11 | SPRING, TENSION | |
| 160 | 3-388-848-01 | SCREW (P2X6) (B TIGHT) | |
| 161 | 3-911-113-01 | SPRING, TENSION | |
| 162 | X-3370-643-1 | PINCH LEVER (REV) ASSY | |
| 163 | X-3367-588-1 | PINCH LEVER (FWD) ASSY | |

| Ref. No. | Part No. | Description | Remark |
|---|---|---|---|
| 164 | 3-908-613-01 | GEAR (S), REEL | |
| 165 | 3-917-141-01 | SPRING, COMPRESSION | |
| 166 | X-3371-305-1 | REEL (T) ASSY | |
| 167 | 3-669-465-01 | WASHER (1.5), STOPPER | |
| 168 | X-3370-173-1 | TU ASSY | |
| 169 | 3-911-116-21 | RIVET, PUSH | |
| * 171 | A-2007-129-A | MD BOARD, COMPLETE (WE405) | |
| * 171 | A-2007-483-A | MD BOARD, COMPLETE (WR350Z/WR661) | |
| 172 | 3-930-972-01 | DETENT, HALF | |
| 173 | 3-917-142-01 | SPRING, COMPRESSION | |
| HP101 | 1-500-093-11 | HEAD, MAGNETIC (PLAYBACK) | |
| HRPE101 | 1-500-094-11 | HEAD, MAGNETIC (REC/PB/ERASE) | |

## 5-5. TC MECHANISM SECTION 3
## (WE405: TCM-220WR1
## WR350Z, WR661: TCM-220WR4E)

● H: MOTOR BOARD
(Supplied with MD board)

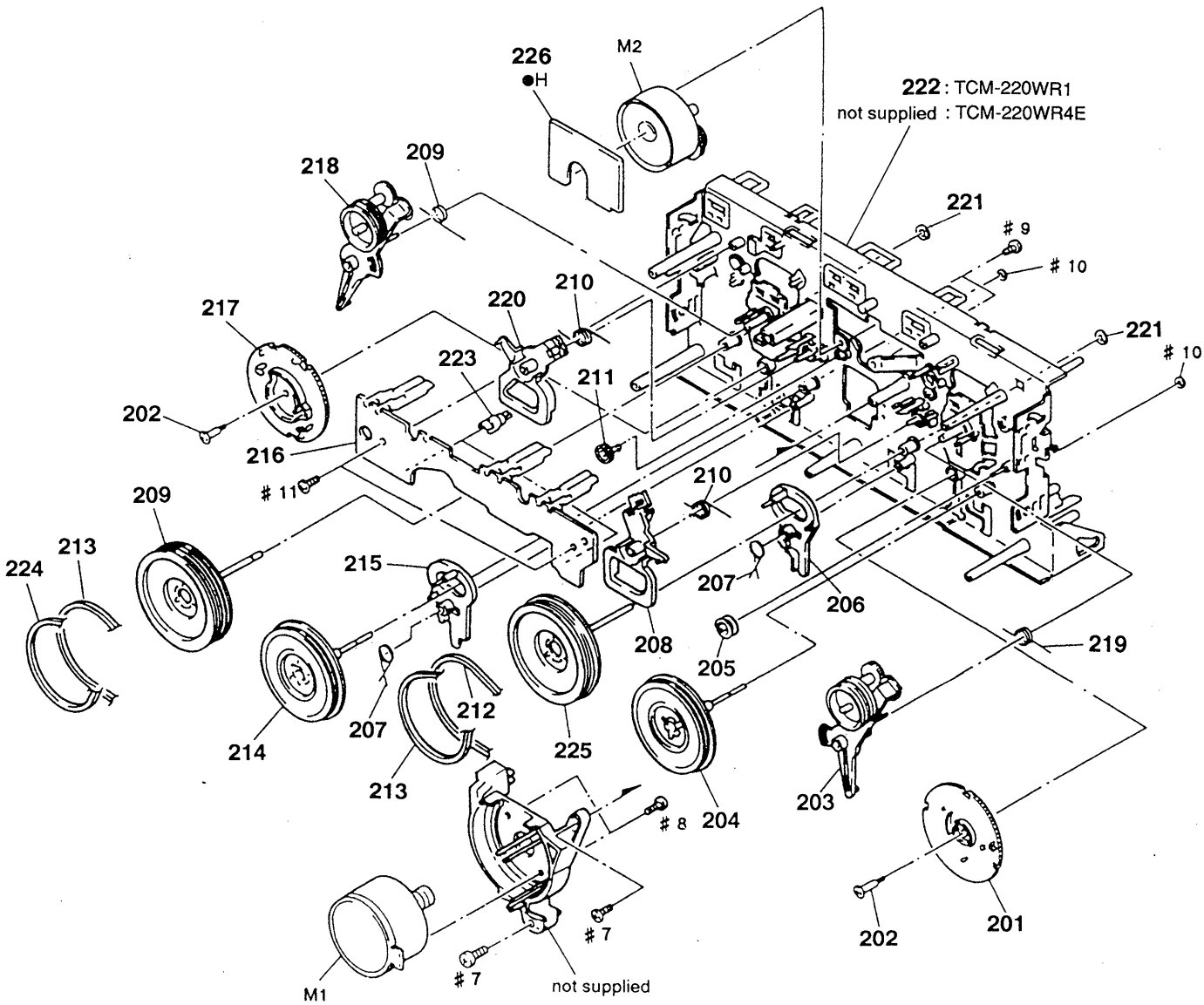


| Ref. No. | Part No. | Description | Remark |
|---|---|---|---|
| 201 | 3-908-597-01 | CAM (A) | |
| 202 | 3-908-608-11 | SCREW, STEP | |
| 203 | X-3367-590-2 | ARM (A) ASSY, FR | |
| 204 | X-3370-169-1 | FLYWHEEL (AR) ASSY | |
| 205 | 3-928-047-01 | PULLEY, TENSION | |
| 206 | 3-908-599-01 | LEVER (REV-A) | |
| 207 | 3-908-601-01 | SPRING (REV LEVER), TORSION | |
| 208 | 3-908-603-01 | LEVER (TRIGGER A) | |
| 209 | X-3370-170-1 | FLYWHEEL (BF) ASSY | |
| 210 | 3-908-605-01 | SPRING (TRIGGER), TORSION | |
| 211 | 3-908-609-01 | GEAR, TRIGGER | |
| 212 | 3-913-845-11 | BELT (A) | |
| 213 | 3-913-846-11 | BELT (FR) | |
| 214 | X-3370-171-1 | FLYWHEEL (BR) ASSY | |
| 215 | 3-908-600-01 | LEVER (REV-B) | |

| Ref. No. | Part No. | Description | Remark |
|---|---|---|---|
| * 216 | 1-650-669-11 | LEAF SWITCH BOARD | |
| 217 | 3-908-598-01 | CAM (B) | |
| 218 | X-3369-849-2 | ARM (B) ASSY, FR | |
| 219 | 3-914-111-01 | SPRING (FR), TORSION | |
| 220 | 3-908-604-01 | LEVER (TRIGGER B) | |
| 221 | 3-911-115-01 | WASHER, STOPPER | |
| 222 | X-3371-441-1 | CHASSIS ASSY, MECHANICAL (TCM-220WR1) | |
| 224 | 3-917-176-11 | BELT (B) | |
| 225 | X-3370-172-1 | FLYWHEEL (AF) ASSY | |
| * 226 | A-2007-129-A | MD BOARD, COMPLETE (WE405) | |
| * 226 | A-2007-483-A | MD BOARD, COMPLETE (WR350Z/WR661) | |
| M1 | X-3371-223-1 | MOTOR ASSY (CAPSTAN) | |
| M2 | A-2004-410-A | MOTOR ASSY, DC (TRRIGER) | |

**LEAF SWITCH**

**MAIN**

# SECTION 6
# ELECTRICAL PARTS LIST

NOTE:

The components identified by mark ⚠ or dotted line with mark ⚠ are critical for safety.
Replace only with part number specified.

Les composants identifiés par une marque ⚠ sont critiques pour la sécurité.
Ne les remplacer que par une piéce portant le numéro spécifié.

When indicating parts by reference number, please include the board name.

- Due to standardization, replacements in the parts list may be different from the parts specified in the diagrams or the components used on the set.
- Items marked "*" are not stocked since they are seldom required for routine service. Some delay should be anticipated when ordering these items.
- RESISTORS
  All resistors are in ohms
  METAL: Metal-film resistor
  F : nonflammable
- SEMICONDUCTORS
  In each case, u: μ , for example:
  uA...: μA..., uPA...: μPA..., uPB...: μPB...,
  uPC...: μPC..., uPD...: μPD...
- CAPACITORS
  uF : μF
- COILS
  uH : μH
- Abbreviation
  CND : Canadian model
  G : German model
  IT : Italian model
  SP : Singapore model
  MY : Malaysia model
  AUS : Australian model
  CH : Chinese model

| Ref.No. | Part No. | Description | | | | Remark |
|---|---|---|---|---|---|---|
| * | 1-650-669-11 | LEAF SWITCH BOARD | | | | |
| | | ********** | | | | |
| | | < CONNECTOR > | | | | |
| * CN1001 | 1-568-854-11 | SOCKET, CONNECTOR 11P | | | | |
| | | < TRANSISTOR > | | | | |
| Q1001 | 8-749-010-90 | TRANSISTOR PHOTO REFLECTOR NJL5165KA-H2 | | | | |
| Q1002 | 8-749-010-90 | TRANSISTOR PHOTO REFLECTOR NJL5165KA-H2 | | | | |
| | | < RESISTOR > | | | | |
| R1001 | 1-249-412-11 | CARBON | 390 | 5% | 1/4W | F |
| R1002 | 1-249-412-11 | CARBON | 390 | 5% | 1/4W | F |
| R1003 | 1-249-414-11 | CARBON | 560 | 5% | 1/4W | F |
| R1004 | 1-247-834-11 | CARBON | 1.3K | 5% | 1/4W | |
| R1005 | 1-247-818-11 | CARBON | 300 | 5% | 1/4W | |
| | | < SWITCH > | | | | |
| S1001 | 1-692-832-11 | SWITCH, PUSH (1 KEY) (A PLAY) | | | | |
| S1002 | 1-692-832-11 | SWITCH, PUSH (1 KEY) (B PLAY) | | | | |
| S1003 | 1-572-248-11 | SWITCH, LEAF (A HALF) | | | | |
| S1004 | 1-571-281-21 | SWITCH, LEAF (A CrO2) | | | | |
| S1005 | 1-571-281-21 | SWITCH, LEAF (REC A) | | | | |
| S1006 | 1-572-248-11 | SWITCH, LEAF (B HALF) | | | | |
| S1007 | 1-571-281-21 | SWITCH, LEAF (B METAL) | | | | |
| S1008 | 1-571-281-21 | SWITCH, LEAF (B CrO2) | | | | |
| S1009 | 1-571-281-21 | SWITCH, LEAF (REC B) | | | | |

**********

| Ref.No. | Part No. | Description | | | | Remark |
|---|---|---|---|---|---|---|
| * | A-2007-484-A | MAIN BOARD, COMPLETE | | | | |
| | | ********** | | | | |
| | | | | | | (WR350Z/WR661:US, CND) |
| * | A-2007-486-A | MAIN BOARD, COMPLETE | | | | |
| | | ********** | | | | |
| | | | | | | (WR661:AEP, UK, G, IT) |
| * | A-2007-487-A | MAIN BOARD, COMPLETE (WR661:E) | | | | |
| | | ********** | | | | |
| * | A-2007-488-A | MAIN BOARD, COMPLETE | | | | |
| | | ********** | | | | |
| | | | | | | (WE405:AEP, UK, G, CH, MY, SP) |
| * | A-2007-489-A | MAIN BOARD, COMPLETE (WE405:E) | | | | |
| | | ********** | | | | |
| * | A-2007-490-A | MAIN BOARD, COMPLETE (WE405:AUS) | | | | |
| | | ********** | | | | |
| * | A-2007-546-A | MAIN BOARD, COMPLETE (WE405:US, CND) | | | | |
| | | ********** | | | | |
| | | MAIN (A) BOARD | | | | |
| | | MAIN (B) BOARD | | | | |
| | | MAIN (C) BOARD | | | | |
| | | MAIN (D) BOARD | | | | |
| | | MAIN (E) BOARD (US, CND, E, AUS) | | | | |
| | | MAIN (F) BOARD (EXCEPT US, CND, E, AUS) | | | | |
| | | MAIN (G) BOARD | | | | |
| | | ********** | | | | |
| * | 3-931-428-01 | HOLDER (FL) | | | | |
| | | < CAPACITOR > | | | | |
| C102 | 1-124-925-11 | ELECT | 2.2uF | 20% | 100V | |
| C103 | 1-126-963-11 | ELECT | 4.7uF | 20% | 50V | |
| C104 | 1-102-122-21 | CERAMIC | 0.0027uF | 10% | 50V | |
| | | | | | | (WR350Z/WR661) |
| C104 | 1-162-302-11 | CERAMIC | 0.0022uF | 20% | 16V | (WE405) |
| C106 | 1-126-964-11 | ELECT | 10uF | 20% | 50V | |
| C107 | 1-137-399-11 | FILM | 0.1uF | 5% | 50V | |
| C108 | 1-137-375-11 | FILM | 0.068uF | 5% | 50V | |
| C109 | 1-126-963-11 | ELECT | 4.7uF | 20% | 50V | |
| C110 | 1-124-902-00 | ELECT | 0.47uF | 20% | 50V | |
| C111 | 1-126-963-11 | ELECT | 4.7uF | 20% | 50V | |

| Ref. No. | Part No. | Description | | | | Remark |
|---|---|---|---|---|---|---|
| C112 | 1-126-963-11 | ELECT | 4.7uF | 20% | 50V | |
| C113 | 1-124-925-11 | ELECT | 2.2uF | 20% | 100V | |
| C114 | 1-126-963-11 | ELECT | 4.7uF | 20% | 50V | |
| C115 | 1-162-294-31 | CERAMIC | 0.001uF | 10% | 50V | |
| | | | (WE405:AEP, UK, G, IT, CH, MY, SP) | | | |
| C117 | 1-162-306-11 | CERAMIC | 0.01uF | 20% | 16V | |
| C202 | 1-124-925-11 | ELECT | 2.2uF | 20% | 100V | |
| C203 | 1-126-963-11 | ELECT | 4.7uF | 20% | 50V | |
| C204 | 1-102-122-21 | CERAMIC | 0.0027uF | 10% | 50V | |
| | | | | | (WR350Z/WR661) | |
| C204 | 1-162-302-11 | CERAMIC | 0.0022uF | 20% | 16V (WE405) | |
| C206 | 1-126-964-11 | ELECT | 10uF | 20% | 50V | |
| C207 | 1-137-399-11 | FILM | 0.1uF | 5% | 50V | |
| C208 | 1-137-375-11 | FILM | 0.068uF | 5% | 50V | |
| C209 | 1-126-963-11 | ELECT | 4.7uF | 20% | 50V | |
| C210 | 1-124-902-00 | ELECT | 0.47uF | 20% | 50V | |
| C211 | 1-126-963-11 | ELECT | 4.7uF | 20% | 50V | |
| C212 | 1-126-963-11 | ELECT | 4.7uF | 20% | 50V | |
| C213 | 1-124-925-11 | ELECT | 2.2uF | 20% | 100V | |
| C214 | 1-126-963-11 | ELECT | 4.7uF | 20% | 50V | |
| C215 | 1-162-294-31 | CERAMIC | 0.001uF | 10% | 50V | |
| | | | (WE405:AEP, UK, G, IT, CH, MY, SP) | | | |
| C217 | 1-162-306-11 | CERAMIC | 0.01uF | 20% | 16V | |
| C501 | 1-124-903-11 | ELECT | 1uF | 20% | 50V | |
| C502 | 1-126-965-11 | ELECT | 22uF | 20% | 50V | |
| C507 | 1-126-964-11 | ELECT | 10uF | 20% | 50V | |
| C508 | 1-126-964-11 | ELECT | 10uF | 20% | 50V | |
| C509 | 1-126-964-11 | ELECT | 10uF | 20% | 50V | |
| C512 | 1-104-664-11 | ELECT | 47uF | 20% | 25V | |
| C513 | 1-126-935-11 | ELECT | 470uF | 20% | 16V | |
| | | | | | (WR350Z/WR661) | |
| C514 | 1-161-494-00 | CERAMIC | 0.022uF | | 25V (WE405) | |
| C701 | 1-126-946-11 | ELECT | 6800uF | 20% | 25V | |
| C702 | 1-126-946-11 | ELECT | 6800uF | 20% | 25V | |
| C703 | 1-124-903-11 | ELECT | 1uF | 20% | 50V | |
| C704 | 1-126-968-11 | ELECT | 100uF | 20% | 50V | |
| C705 | 1-128-551-11 | ELECT | 22uF | 20% | 25V | |
| C706 | 1-126-927-11 | ELECT | 2200uF | 20% | 10V | |
| C707 | 1-126-927-11 | ELECT | 2200uF | 20% | 10V | |
| C708 | 1-126-963-11 | ELECT | 4.7uF | 20% | 50V | |
| C710 | 1-126-916-11 | ELECT | 1000uF | 20% | 6.3V | |
| C711 | 1-126-965-11 | ELECT | 22uF | 20% | 50V | |
| ⚠C712 | 1-113-925-51 | ELECT | 0.01uF | 20% | 250V | |
| | | (WE405:AEP, UK, G, IT, CH, MY, SP/WR661:AEP, UK, G, IT) | | | | |
| C714 | 1-161-494-00 | CERAMIC | 0.022uF | | 25V | |
| C801 | 1-162-306-11 | CERAMIC | 0.01uF | 20% | 16V | |
| C802 | 1-162-306-11 | CERAMIC | 0.01uF | 20% | 16V | |
| C806 | 1-164-159-11 | CERAMIC | 0.1uF | | 50V | |
| C807 | 1-161-494-00 | CERAMIC | 0.022uF | | 25V | |
| C808 | 1-161-494-00 | CERAMIC | 0.022uF | | 25V | |
| C809 | 1-161-494-00 | CERAMIC | 0.022uF | | 25V | |
| C810 | 1-161-494-00 | CERAMIC | 0.022uF | | 25V | |
| C811 | 1-126-935-11 | ELECT | 470uF | 20% | 6.3V | |
| C812 | 1-164-159-11 | CERAMIC | 0.1uF | | 50V | |
| C813 | 1-137-446-11 | FILM | 0.18uF | 5% | 50V | |
| C814 | 1-136-175-00 | FILM | 0.68uF | 5% | 50V | |
| C815 | 1-137-370-11 | FILM | 0.01uF | 5% | 50V | |
| C816 | 1-164-159-11 | CERAMIC | 0.1uF | | 50V | |
| C817 | 1-161-494-00 | CERAMIC | 0.022uF | | 25V | |
| C818 | 1-126-952-11 | ELECT | 1000uF | 20% | 16V | |
| C819 | 1-126-963-11 | ELECT | 4.7uF | 20% | 50V | |
| C901 | 1-126-967-11 | ELECT | 47uF | 20% | 10V | |

< CONNECTOR >

| | | | |
|---|---|---|---|
| * CN702 | 1-580-230-31 | PIN, CONNECTOR (PC BOARD) 2P | |
| CN703 | 1-568-106-11 | PIN, CONNECTOR 4P (WE405:E/WR661:E) | |
| CN705 | 1-568-226-11 | PIN, CONNECTOR 2P | |
| | | (WE405:AEP, UK, G, IT, CH, MY, SP/WR661:AEP, UK, G, IT) | |
| CNA501 | 1-506-468-11 | PIN, CONNECTOR 3P (WE405) | |
| * CNA808 | 1-568-954-11 | PIN, CONNECTOR 5P | |
| | | (WE405:US, CND, E, AUS/WR350Z/WR661:US, CND, E) | |
| * CNF802 | 1-568-845-11 | SOCKET, CONNECTOR 31P | |
| CNF803 | 1-568-838-11 | SOCKET, CONNECTOR 21P | |
| * CNF804 | 1-568-830-11 | SOCKET, CONNECTOR 11P | |
| * CNF805 | 1-568-830-11 | SOCKET, CONNECTOR 11P | |
| * CNF806 | 1-568-830-11 | SOCKET, CONNECTOR 11P | |
| * CNF807 | 1-568-873-11 | SOCKET, CONNECTOR 31P | |
| CNM701 | 1-766-269-11 | PIN, CONNECTOR (PC BOARD) 7P | |

< DIODE >

| | | | |
|---|---|---|---|
| D101 | 8-719-933-33 | DIODE | HZS6A1L |
| D201 | 8-719-933-33 | DIODE | HZS6A1L |
| D501 | 8-719-987-63 | DIODE | 1N4148M |
| D701 | 8-719-024-99 | DIODE | 11ES2-NTA2B |
| D702 | 8-719-024-99 | DIODE | 11ES2-NTA2B |
| D703 | 8-719-024-99 | DIODE | 11ES2-NTA2B |
| D704 | 8-719-024-99 | DIODE | 11ES2-NTA2B |
| D705 | 8-719-987-63 | DIODE | 1N4148M |
| D706 | 8-719-987-63 | DIODE | 1N4148M |
| D707 | 8-719-024-99 | DIODE | 11ES2-NTA2B |
| D708 | 8-719-987-63 | DIODE | 1N4148M |
| D709 | 8-719-933-33 | DIODE | HZS6A1L |
| D710 | 8-719-000-54 | DIODE | UZL-6L3 |
| D711 | 8-719-933-33 | DIODE | HZS6A1L |
| D712 | 8-719-933-38 | DIODE | HZS6B3L |
| D713 | 8-719-987-63 | DIODE | 1N4148M |
| D714 | 8-719-987-63 | DIODE | 1N4148M |
| D715 | 8-719-987-63 | DIODE | 1N4148M |
| D716 | 8-719-000-78 | DIODE | UZL-7L2 |
| D718 | 8-719-933-33 | DIODE | HZS6A1L |
| D901 | 8-719-313-48 | DIODE | SEL6210S-TH12 (AUTO) |

| | |
|---|---|
| The components identified by mark ⚠ or dotted line with mark ⚠ are critical for safety.<br>Replace only with part number specified. | Les composants identifiés par une marque ⚠ sont critiques pour la sécurité.<br>Ne les remplacer que par une piéce portant le numéro spécifié. |

# MAIN

| Ref. No. | Part No. | Description | Remark |
|---|---|---|---|
| | | < FLUORESCENT INDICATOR > | |
| FLT901 | 1-517-491-11 | INDICATOR TUBE, FLUORESCENT | |
| | | < IC > | |
| IC501 | 8-752-075-27 | IC CXA1878Q | |
| IC502 | 8-759-634-51 | IC M5218AP (WE405) | |
| IC701 | 8-759-634-51 | IC M5218AP | |
| IC801 | 8-759-370-82 | IC M38172M4-156FP | |
| IC802 | 8-759-634-51 | IC M5218AP | |
| IC803 | 8-759-165-82 | IC PST600E-T | |
| IC804 | 8-759-822-09 | IC LB1641 | |
| IC806 | 8-759-000-48 | IC MC14052BCP | |
| IC901 | 8-741-780-51 | IC SBX1780-51 | |
| | | < JACK > | |
| J501 | 1-770-614-11 | JACK, PIN 4P (LINE IN, OUT) | |
| J502 | 1-750-733-11 | JACK (LARGE TYPE) (PHONES) (WE405) | |
| | | < FILTER > | |
| LPF101 | 1-235-175-11 | FILTER, LOW PASS (WE405) | |
| LPF101 | 1-239-355-11 | FILTER, LOW PASS (WR350Z/WR661) | |
| LPF201 | 1-235-175-11 | FILTER, LOW PASS (WE405) | |
| LPF201 | 1-239-355-11 | FILTER, LOW PASS (WR350Z/WR661) | |
| | | < TRANSISTOR > | |
| Q101 | 8-729-206-28 | TRANSISTOR RN1210 | |
| Q102 | 8-729-142-25 | TRANSISTOR 2SD1020-HFE | |
| Q201 | 8-729-206-28 | TRANSISTOR RN1210 | |
| Q202 | 8-729-142-25 | TRANSISTOR 2SD1020-HFE | |
| Q501 | 8-729-900-65 | TRANSISTOR DTA144ES | |
| Q701 | 8-729-141-83 | TRANSISTOR 2SB1094-LK | |
| Q702 | 8-729-209-15 | TRANSISTOR 2SD2012 | |
| Q703 | 8-729-141-83 | TRANSISTOR 2SB1094-LK | |
| Q704 | 8-729-620-05 | TRANSISTOR 2SC2603-EF | |
| Q705 | 8-729-900-80 | TRANSISTOR DTC114ES (WE405:US, CND, E, AUS/WR350Z/WR661:US, CND, E) | |
| Q706 | 8-729-900-80 | TRANSISTOR DTC114ES (WE405:US, CND, E, AUS/WR350Z/WR661:US, CND, E) | |
| Q707 | 8-729-119-76 | TRANSISTOR 2SA1175-HFE | |
| Q708 | 8-729-140-04 | TRANSISTOR 2SB1116A-L | |
| Q801 | 8-729-206-28 | TRANSISTOR RN1210 (WE405:US, CND, E, AUS/WR350Z/WR661:US, CND, E) | |
| Q802 | 8-729-900-89 | TRANSISTOR DTC144ES | |
| Q803 | 8-729-801-93 | TRANSISTOR 2SD1387 | |
| Q804 | 8-729-900-61 | TRANSISTOR DTA114ES | |
| Q805 | 8-729-119-76 | TRANSISTOR 2SA1175-HFE | |
| Q806 | 8-729-900-89 | TRANSISTOR DTC144ES | |
| Q807 | 8-729-206-28 | TRANSISTOR RN1210 | |
| Q808 | 8-729-119-76 | TRANSISTOR 2SA1175-HFE | |

| Ref. No. | Part No. | Description | | | | Remark |
|---|---|---|---|---|---|---|
| | | < RESISTOR > | | | | |
| R101 | 1-249-429-11 | CARBON | 10K | 5% | 1/4W | |
| R102 | 1-247-887-00 | CARBON | 220K | 5% | 1/4W | |
| R103 | 1-249-423-11 | CARBON | 3.3K | 5% | 1/4W | F |
| R104 | 1-247-887-00 | CARBON | 220K | 5% | 1/4W | |
| R105 | 1-247-848-11 | CARBON | 5.1K | 5% | 1/4W | |
| R106 | 1-249-420-11 | CARBON | 1.8K | 5% | 1/4W | F |
| R107 | 1-249-421-11 | CARBON | 2.2K | 5% | 1/4W | F |
| R108 | 1-249-430-11 | CARBON | 12K | 5% | 1/4W | |
| R109 | 1-249-417-11 | CARBON | 1K | 5% | 1/4W | F |
| R110 | 1-249-429-11 | CARBON | 10K | 5% | 1/4W | |
| R111 | 1-249-423-11 | CARBON | 3.3K | 5% | 1/4W | F |
| R112 | 1-249-417-11 | CARBON | 1K | 5% | 1/4W | F |
| R113 | 1-249-439-11 | CARBON | 68K | 5% | 1/4W | |
| R114 | 1-249-429-11 | CARBON | 10K | 5% | 1/4W | |
| R115 | 1-249-424-11 | CARBON | 3.9K | 5% | 1/4W | F |
| R116 | 1-249-425-11 | CARBON | 4.7K | 5% | 1/4W | F |
| R117 | 1-249-433-11 | CARBON | 22K | 5% | 1/4W | (WE405) |
| R118 | 1-249-437-11 | CARBON | 47K | 5% | 1/4W | (WE405) |
| R119 | 1-249-433-11 | CARBON | 22K | 5% | 1/4W | (WE405) |
| R120 | 1-249-409-11 | CARBON | 220 | 5% | 1/4W | F (WE405) |
| R121 | 1-247-872-11 | CARBON | 51K | 5% | 1/4W | |
| R201 | 1-249-429-11 | CARBON | 10K | 5% | 1/4W | |
| R202 | 1-247-887-00 | CARBON | 220K | 5% | 1/4W | |
| R203 | 1-249-423-11 | CARBON | 3.3K | 5% | 1/4W | F |
| R204 | 1-247-887-00 | CARBON | 220K | 5% | 1/4W | |
| R205 | 1-247-848-11 | CARBON | 5.1K | 5% | 1/4W | |
| R206 | 1-249-420-11 | CARBON | 1.8K | 5% | 1/4W | F |
| R207 | 1-249-421-11 | CARBON | 2.2K | 5% | 1/4W | F |
| R208 | 1-249-430-11 | CARBON | 12K | 5% | 1/4W | |
| R209 | 1-249-417-11 | CARBON | 1K | 5% | 1/4W | F |
| R210 | 1-249-429-11 | CARBON | 10K | 5% | 1/4W | |
| R211 | 1-249-423-11 | CARBON | 3.3K | 5% | 1/4W | F |
| R212 | 1-249-417-11 | CARBON | 1K | 5% | 1/4W | F |
| R213 | 1-249-439-11 | CARBON | 68K | 5% | 1/4W | |
| R214 | 1-249-429-11 | CARBON | 10K | 5% | 1/4W | |
| R215 | 1-249-424-11 | CARBON | 3.9K | 5% | 1/4W | F |
| R216 | 1-249-425-11 | CARBON | 4.7K | 5% | 1/4W | F |
| R217 | 1-249-433-11 | CARBON | 22K | 5% | 1/4W | (WE405) |
| R218 | 1-249-437-11 | CARBON | 47K | 5% | 1/4W | (WE405) |
| R219 | 1-249-433-11 | CARBON | 22K | 5% | 1/4W | (WE405) |
| R220 | 1-249-409-11 | CARBON | 220 | 5% | 1/4W | F (WE405) |
| R221 | 1-247-872-11 | CARBON | 51K | 5% | 1/4W | |
| R501 | 1-215-452-00 | METAL | 20K | 1% | 1/4W | |
| R502 | 1-215-455-00 | METAL | 27K | 1% | 1/4W | |
| R505 | 1-249-413-11 | CARBON | 470 | 5% | 1/4W | F |
| R506 | 1-249-429-11 | CARBON | 10K | 5% | 1/4W | |
| R507 | 1-249-437-11 | CARBON | 47K | 5% | 1/4W | |
| R509 | 1-249-417-11 | CARBON | 1K | 5% | 1/4W | F |
| R510 | 1-247-807-31 | CARBON | 100 | 5% | 1/4W | |

| Ref. No. | Part No. | Description | | | | Remark |
|---|---|---|---|---|---|---|
| R517 | 1-249-410-11 | CARBON | 270 | 5% | 1/4W | F |
| R520 | 1-249-437-11 | CARBON | 47K | 5% | 1/4W | |
| R701 | 1-249-414-11 | CARBON | 560 | 5% | 1/4W | F |
| R702 | 1-249-429-11 | CARBON | 10K | 5% | 1/4W | |
| | | (WE405:US, CND, E, AUS/WR350Z/WR661:US, CND, E) | | | | |
| R704 | 1-249-425-11 | CARBON | 4.7K | 5% | 1/4W | F |
| R705 | 1-247-852-11 | CARBON | 7.5K | 5% | 1/4W | |
| R706 | 1-249-419-11 | CARBON | 1.5K | 5% | 1/4W | F |
| R707 | 1-249-429-11 | CARBON | 10K | 5% | 1/4W | |
| R708 | 1-249-419-11 | CARBON | 1.5K | 5% | 1/4W | F |
| R709 | 1-249-425-11 | CARBON | 4.7K | 5% | 1/4W | F |
| R710 | 1-249-417-11 | CARBON | 1K | 5% | 1/4W | F |
| R711 | 1-249-427-11 | CARBON | 6.8K | 5% | 1/4W | F |
| R712 | 1-249-427-11 | CARBON | 6.8K | 5% | 1/4W | F |
| R713 | 1-249-417-11 | CARBON | 1K | 5% | 1/4W | F |
| R714 | 1-249-428-11 | CARBON | 8.2K | 5% | 1/4W | F |
| R715 | 1-249-421-11 | CARBON | 2.2K | 5% | 1/4W | F |
| R716 | 1-249-430-11 | CARBON | 12K | 5% | 1/4W | |
| R717 | 1-249-421-11 | CARBON | 2.2K | 5% | 1/4W | F |
| R718 | 1-249-429-11 | CARBON | 10K | 5% | 1/4W | |
| R719 | 1-249-437-11 | CARBON | 47K | 5% | 1/4W | |
| R720 | 1-249-413-11 | CARBON | 470 | 5% | 1/4W | F |
| R721 | 1-249-421-11 | CARBON | 2.2K | 5% | 1/4W | F |
| ⚠R722 | 1-219-137-11 | FUSIBLE | 0.33 | 10% | 1/4W | |
| ⚠R723 | 1-217-371-00 | FUSIBLE | 0.47 | 10% | 1/4W | |
| R724 | 1-249-409-11 | CARBON | 220 | 5% | 1/4W | F |
| ⚠R725 | 1-219-137-11 | FUSIBLE | 0.33 | 10% | 1/4W | |
| R801 | 1-249-433-11 | CARBON | 22K | 5% | 1/4W | |
| R802 | 1-247-807-31 | CARBON | 100 | 5% | 1/4W | |
| R803 | 1-249-429-11 | CARBON | 10K | 5% | 1/4W | |
| R804 | 1-249-433-11 | CARBON | 22K | 5% | 1/4W | |
| R805 | 1-249-433-11 | CARBON | 22K | 5% | 1/4W | |
| R806 | 1-247-895-00 | CARBON | 470K | 5% | 1/4W | |
| R807 | 1-247-895-00 | CARBON | 470K | 5% | 1/4W | |
| R808 | 1-249-425-11 | CARBON | 4.7K | 5% | 1/4W | F |
| R809 | 1-249-425-11 | CARBON | 4.7K | 5% | 1/4W | F |
| R810 | 1-249-425-11 | CARBON | 4.7K | 5% | 1/4W | F |
| R811 | 1-249-417-11 | CARBON | 1K | 5% | 1/4W | F |
| R812 | 1-249-436-11 | CARBON | 39K | 5% | 1/4W | |
| R813 | 1-249-436-11 | CARBON | 39K | 5% | 1/4W | |
| R814 | 1-249-441-11 | CARBON | 100K | 5% | 1/4W | |
| R815 | 1-249-429-11 | CARBON | 10K | 5% | 1/4W | |
| R816 | 1-249-429-11 | CARBON | 10K | 5% | 1/4W | |
| R817 | 1-249-429-11 | CARBON | 10K | 5% | 1/4W | |
| R818 | 1-249-429-11 | CARBON | 10K | 5% | 1/4W | |
| R819 | 1-249-407-11 | CARBON | 150 | 5% | 1/4W | F |
| R820 | 1-249-437-11 | CARBON | 47K | 5% | 1/4W | |
| R821 | 1-249-437-11 | CARBON | 47K | 5% | 1/4W | |
| R822 | 1-249-437-11 | CARBON | 47K | 5% | 1/4W | |
| R825 | 1-249-418-11 | CARBON | 1.2K | 5% | 1/4W | F |

| Ref. No. | Part No. | Description | | | | Remark |
|---|---|---|---|---|---|---|
| R826 | 1-249-429-11 | CARBON | 10K | 5% | 1/4W | |
| R827 | 1-249-429-11 | CARBON | 10K | 5% | 1/4W | |
| R828 | 1-249-431-11 | CARBON | 15K | 5% | 1/4W | |
| R829 | 1-249-414-11 | CARBON | 560 | 5% | 1/4W | F |
| R830 | 1-249-433-11 | CARBON | 22K | 5% | 1/4W | |
| R831 | 1-249-433-11 | CARBON | 22K | 5% | 1/4W | |
| R832 | 1-249-429-11 | CARBON | 10K | 5% | 1/4W | |
| R833 | 1-249-425-11 | CARBON | 4.7K | 5% | 1/4W | F |
| R834 | 1-249-435-11 | CARBON | 33K | 5% | 1/4W | (WE405) |
| R835 | 1-249-432-11 | CARBON | 18K | 5% | 1/4W | (WE405) |
| R836 | 1-249-426-11 | CARBON | 5.6K | 5% | 1/4W | (WE405) |
| R837 | 1-249-421-11 | CARBON | 2.2K | 5% | 1/4W | F |
| R838 | 1-249-421-11 | CARBON | 2.2K | 5% | 1/4W | F |
| R839 | 1-249-421-11 | CARBON | 2.2K | 5% | 1/4W | F |
| R840 | 1-249-433-11 | CARBON | 22K | 5% | 1/4W | |
| R841 | 1-249-433-11 | CARBON | 22K | 5% | 1/4W | |
| R842 | 1-249-417-11 | CARBON | 1K | 5% | 1/4W | F (WE405) |
| R844 | 1-249-429-11 | CARBON | 10K | 5% | 1/4W | (WR350Z/WR661) |
| R845 | 1-249-416-11 | CARBON | 820 | 5% | 1/4W | F (WR350Z/WR661) |
| R846 | 1-249-426-11 | CARBON | 5.6K | 5% | 1/4W | (WR350Z/WR661) |
| R847 | 1-249-433-11 | CARBON | 22K | 5% | 1/4W | (WR350Z/WR661) |
| R849 | 1-249-441-11 | CARBON | 100K | 5% | 1/4W | |
| R902 | 1-249-418-11 | CARBON | 1.2K | 5% | 1/4W | F |
| R903 | 1-249-420-11 | CARBON | 1.8K | 5% | 1/4W | F |
| R904 | 1-249-422-11 | CARBON | 2.7K | 5% | 1/4W | F |
| R905 | 1-249-418-11 | CARBON | 1.2K | 5% | 1/4W | F |
| R906 | 1-249-420-11 | CARBON | 1.8K | 5% | 1/4W | F |
| R907 | 1-249-418-11 | CARBON | 1.2K | 5% | 1/4W | F |
| R908 | 1-249-420-11 | CARBON | 1.8K | 5% | 1/4W | F |
| R909 | 1-249-422-11 | CARBON | 2.7K | 5% | 1/4W | F |
| R910 | 1-249-424-11 | CARBON | 3.9K | 5% | 1/4W | F |
| R911 | 1-249-427-11 | CARBON | 6.8K | 5% | 1/4W | F |
| R912 | 1-249-418-11 | CARBON | 1.2K | 5% | 1/4W | F |
| R913 | 1-249-420-11 | CARBON | 1.8K | 5% | 1/4W | F |
| R914 | 1-249-422-11 | CARBON | 2.7K | 5% | 1/4W | F |
| R915 | 1-249-424-11 | CARBON | 3.9K | 5% | 1/4W | F |
| R916 | 1-249-413-11 | CARBON | 470 | 5% | 1/4W | F |
| R917 | 1-249-422-11 | CARBON | 2.7K | 5% | 1/4W | F |
| R918 | 1-249-424-11 | CARBON | 3.9K | 5% | 1/4W | F |
| R919 | 1-247-807-31 | CARBON | 100 | 5% | 1/4W | |
| R920 | 1-249-407-11 | CARBON | 150 | 5% | 1/4W | F |

< VARIABLE RESISTOR >

| | | |
|---|---|---|
| RV101 | 1-241-630-11 | RES, ADJ, CARBON 10K |
| RV201 | 1-241-630-11 | RES, ADJ, CARBON 10K |
| RV501 | 1-241-797-11 | RES, VAR, CARBON 20K (REC LEVEL) |

| | |
|---|---|
| The components identified by mark ⚠ or dotted line with mark ⚠ are critical for safety.<br>Replace only with part number specified. | Les composants identifiés par une marque ⚠ sont critiques pour la sécurité.<br>Ne les remplacer que par une piéce portant le numéro spécifié. |

# MAIN MD

| Ref.No. | Part No. | Description | Remark |
|---|---|---|---|
| | | < SWITCH > | |
| ⚠S701 | 1-762-581-11 | SWITCH, AC POWER PUSH (1 KEY) (POWER) (WE405:AEP, UK, G, IT, CH, MY, SP/WR661:AEP, UK, G, IT) | |
| ⚠S901 | 1-762-580-11 | SWITCH, PUSH (1 KEY) (POWER) (WE405:US, CND, E, AUS/WR350Z/WR661:US, CND, E) | |
| S902 | 1-762-567-11 | SWITCH, SLIDE (DIRECTION) | |
| S903 | 1-762-567-11 | SWITCH, SLIDE (DOLBY NR) | |
| S904 | 1-554-303-21 | SWITCH, TACTILE (■ DECK A) | |
| S905 | 1-554-303-21 | SWITCH, TACTILE (▷ DECK A) | |
| S906 | 1-554-303-21 | SWITCH, TACTILE (◁ DECK A) | |
| S907 | 1-554-303-21 | SWITCH, TACTILE (DECK A, COUNTER RESET) | |
| S908 | 1-554-303-21 | SWITCH, TACTILE (◀◀ DECK A) | |
| S909 | 1-554-303-21 | SWITCH, TACTILE (▶▶ DECK A) | |
| S910 | 1-554-303-21 | SWITCH, TACTILE (DECK B, COUNTER RESET) | |
| S911 | 1-554-303-21 | SWITCH, TACTILE (◀◀ DECK B) | |
| S912 | 1-554-303-21 | SWITCH, TACTILE (▶▶ DECK B) | |
| S913 | 1-554-303-21 | SWITCH, TACTILE (REC ● DECK B) | |
| S914 | 1-554-303-21 | SWITCH, TACTILE (PAUSE ▮▮ DECK B) | |
| S915 | 1-554-303-21 | SWITCH, TACTILE (REC MUTE ○ DECK B) | |
| S916 | 1-554-303-21 | SWITCH, TACTILE (HIGH/NORMAL DECK B) | |
| S917 | 1-554-303-21 | SWITCH, TACTILE (■ DECK B) | |
| S918 | 1-554-303-21 | SWITCH, TACTILE (▷ DECK B) | |
| S919 | 1-554-303-21 | SWITCH, TACTILE (◁ DECK B) | |
| S920 | 1-554-303-21 | SWITCH, TACTILE (ARL) | |
| S921 | 1-554-303-21 | SWITCH, TACTILE (FADER) | |
| | | < TRANSFORMER > | |
| ⚠T901 | 1-429-387-11 | TRANSFORMER, POWER (WE405:US, CND/WR350Z/WR661:US, CND) | |
| ⚠T901 | 1-429-388-11 | TRANSFORMER, POWER (WE405:AEP, UK, G, AUS, CH, MY, SP/WR661:AEP, UK, G, IT) | |
| ⚠T901 | 1-429-389-11 | TRANSFORMER, POWER (WE405:E/WR661:E) | |
| | | < TEST PIN > | |
| * TP801 | 1-560-060-00 | PIN, CONNECTOR 2P | |
| | | < VIBRATOR > | |
| X801 | 1-577-358-21 | VIBRATOR, CERAMIC (4MHz) | |
| ********** | | | |
| | A-2007-129-A | MD BOARD, COMPLETE (WE405) ********** (including MOTOR board) | |
| | | < CAPACITOR > | |
| C301 | 1-162-289-31 | CERAMIC 390PF 10% 50V | |
| C303 | 1-162-282-31 | CERAMIC 100PF 10% 50V | |
| C304 | 1-130-487-00 | MYLAR 0.022uF 5% 50V | |
| C305 | 1-124-234-00 | ELECT 22uF 20% 16V | |
| C311 | 1-162-289-31 | CERAMIC 390PF 10% 50V | |
| C313 | 1-162-282-31 | CERAMIC 100PF 10% 50V | |
| C314 | 1-130-487-00 | MYLAR 0.022uF 5% 50V | |
| C315 | 1-126-233-11 | ELECT 22uF 20% 50V | |
| C331 | 1-107-609-11 | CERAMIC 75PF 5% 500V | |
| C332 | 1-162-288-31 | CERAMIC 330PF 10% 50V | |
| C341 | 1-161-494-00 | CERAMIC 0.022uF 25V | |
| C342 | 1-136-165-00 | FILM 0.1uF 5% 50V | |
| C343 | 1-162-306-11 | CERAMIC 0.01uF 20% 16V | |
| C344 | 1-130-472-00 | MYLAR 0.0012uF 5% 50V | |
| C345 | 1-102-973-00 | CERAMIC 100PF 5% 50V | |
| C346 | 1-136-356-11 | FILM 470PF 5% 100V | |
| C401 | 1-162-289-31 | CERAMIC 390PF 10% 50V | |
| C403 | 1-162-282-31 | CERAMIC 100PF 10% 50V | |
| C404 | 1-130-487-00 | MYLAR 0.022uF 5% 50V | |
| C405 | 1-124-234-00 | ELECT 22uF 20% 16V | |
| C411 | 1-162-289-31 | CERAMIC 390PF 10% 50V | |
| C413 | 1-162-282-31 | CERAMIC 100PF 10% 50V | |
| C414 | 1-130-487-00 | MYLAR 0.022uF 5% 50V | |
| C415 | 1-126-233-11 | ELECT 22uF 20% 50V | |
| C431 | 1-107-609-11 | CERAMIC 75PF 5% 500V | |
| C432 | 1-162-288-31 | CERAMIC 330PF 10% 50V | |
| C441 | 1-161-494-00 | CERAMIC 0.022uF 25V | |
| C442 | 1-136-165-00 | FILM 0.1uF 5% 50V | |
| C443 | 1-162-306-11 | CERAMIC 0.01uF 20% 16V | |
| C444 | 1-130-472-00 | MYLAR 0.0012uF 5% 50V | |
| C445 | 1-102-973-00 | CERAMIC 100PF 5% 50V | |
| C446 | 1-136-356-11 | FILM 470PF 5% 100V | |
| C601 | 1-124-907-11 | ELECT 10uF 20% 50V | |
| C602 | 1-124-907-11 | ELECT 10uF 20% 50V | |
| C611 | 1-124-907-11 | ELECT 10uF 20% 50V | |
| C612 | 1-124-907-11 | ELECT 10uF 20% 50V | |
| C621 | 1-136-293-11 | FILM 0.0082uF 5% 100V | |
| C622 | 1-136-173-00 | FILM 0.47uF 5% 50V | |
| C623 | 1-130-299-00 | FILM 0.012uF 5% 50V | |
| C624 | 1-137-436-11 | FILM 0.0039uF 5% 50V | |
| C625 | 1-137-436-11 | FILM 0.0039uF 5% 50V | |
| C641 | 1-126-233-11 | ELECT 22uF 20% 50V | |
| C642 | 1-104-664-11 | ELECT 47uF 20% 16V | |
| C643 | 1-124-465-00 | ELECT 0.47uF 20% 50V | |
| C644 | 1-107-584-11 | CERAMIC 4PF 0.25PF 500V | |
| C651 | 1-161-494-00 | CERAMIC 0.022uF 25V | |
| | | < CONNECTOR > | |
| * CN601 | 1-568-864-11 | SOCKET, CONNECTOR 21P | |
| * CN651 | 1-564-521-11 | PLUG, CONNECTOR 6P | |
| | | < DIODE > | |
| D601 | 8-719-987-63 | DIODE 1N4148M | |

| | |
|---|---|
| The components identified by mark ⚠ or dotted line with mark ⚠ are critical for safety.<br>Replace only with part number specified. | Les composants identifiés par une marque ⚠ sont critiques pour la sécurité.<br>Ne les remplacer que par une piéce portant le numéro spécifié. |

| Ref.No. | Part No. | Description | | | | Remark |
|---|---|---|---|---|---|---|
| | | < IC > | | | | |
| IC601 | 8-759-710-59 | IC NJM4580D-D | | | | |
| IC611 | 8-759-710-59 | IC NJM4580D-D | | | | |
| IC641 | 8-759-106-56 | IC uPC1297CA | | | | |
| | | < COIL > | | | | |
| L331 | 1-410-780-11 | INDUCTOR | 27mH | | | |
| L431 | 1-410-780-11 | INDUCTOR | 27mH | | | |
| | | < MOTOR > | | | | |
| M2 | A-2004-410-A | MOTOR ASSY, DC (TRIGGER) | | | | |
| | | < TRANSISTOR > | | | | |
| Q621 | 8-729-194-57 | TRANSISTOR | 2SC945-P | | | |
| Q622 | 8-729-194-57 | TRANSISTOR | 2SC945-P | | | |
| Q623 | 8-729-119-76 | TRANSISTOR | 2SA1175-HFE | | | |
| Q651 | 8-729-900-65 | TRANSISTOR | DTA144ES | | | |
| | | < RESISTOR > | | | | |
| R301 | 1-247-881-00 | CARBON | 120K | 5% | 1/4W | |
| R302 | 1-247-807-31 | CARBON | 100 | 5% | 1/4W | |
| R304 | 1-247-882-11 | CARBON | 130K | 5% | 1/4W | |
| R305 | 1-247-850-11 | CARBON | 6.2K | 5% | 1/4W | |
| R311 | 1-247-881-00 | CARBON | 120K | 5% | 1/4W | |
| R312 | 1-247-807-31 | CARBON | 100 | 5% | 1/4W | |
| R314 | 1-247-882-11 | CARBON | 130K | 5% | 1/4W | |
| R315 | 1-247-850-11 | CARBON | 6.2K | 5% | 1/4W | |
| R331 | 1-249-430-11 | CARBON | 12K | 5% | 1/4W | |
| R341 | 1-249-429-11 | CARBON | 10K | 5% | 1/4W | |
| R342 | 1-249-435-11 | CARBON | 33K | 5% | 1/4W | |
| R343 | 1-247-883-00 | CARBON | 150K | 5% | 1/4W | |
| ⚠R344 | 1-212-857-00 | FUSIBLE | 10 | 5% | 1/4W | F |
| R401 | 1-247-881-00 | CARBON | 120K | 5% | 1/4W | |
| R402 | 1-247-807-31 | CARBON | 100 | 5% | 1/4W | |
| R404 | 1-247-882-11 | CARBON | 130K | 5% | 1/4W | |
| R405 | 1-247-850-11 | CARBON | 6.2K | 5% | 1/4W | |
| R411 | 1-247-881-00 | CARBON | 120K | 5% | 1/4W | |
| R412 | 1-247-807-31 | CARBON | 100 | 5% | 1/4W | |
| R414 | 1-247-882-11 | CARBON | 130K | 5% | 1/4W | |
| R415 | 1-247-850-11 | CARBON | 6.2K | 5% | 1/4W | |
| R431 | 1-249-430-11 | CARBON | 12K | 5% | 1/4W | |
| R441 | 1-249-429-11 | CARBON | 10K | 5% | 1/4W | |
| R442 | 1-249-435-11 | CARBON | 33K | 5% | 1/4W | |
| R443 | 1-247-883-00 | CARBON | 150K | 5% | 1/4W | |
| ⚠R444 | 1-212-857-00 | FUSIBLE | 10 | 5% | 1/4W | F |
| R601 | 1-249-409-11 | CARBON | 220 | 5% | 1/4W | F |
| R602 | 1-249-409-11 | CARBON | 220 | 5% | 1/4W | F |
| R611 | 1-249-409-11 | CARBON | 220 | 5% | 1/4W | F |
| R612 | 1-249-409-11 | CARBON | 220 | 5% | 1/4W | F |

| Ref.No. | Part No. | Description | | | | Remark |
|---|---|---|---|---|---|---|
| ⚠R621 | 1-212-851-00 | FUSIBLE | 5.6 | 5% | 1/4W | F |
| ⚠R622 | 1-212-851-00 | FUSIBLE | 5.6 | 5% | 1/4W | F |
| R623 | 1-249-440-11 | CARBON | 82K | 5% | 1/4W | |
| R624 | 1-249-440-11 | CARBON | 82K | 5% | 1/4W | |
| R625 | 1-249-429-11 | CARBON | 10K | 5% | 1/4W | |
| R626 | 1-249-429-11 | CARBON | 10K | 5% | 1/4W | |
| R651 | 1-247-856-00 | CARBON | 11K | 5% | 1/4W | |
| R652 | 1-247-856-00 | CARBON | 11K | 5% | 1/4W | |
| R653 | 1-249-441-11 | CARBON | 100K | 5% | 1/4W | |
| | | < VARIABLE RESISTOR > | | | | |
| RV301 | 1-238-598-11 | RES, ADJ, CARBON 2.2K | | | | |
| RV311 | 1-238-598-11 | RES, ADJ, CARBON 2.2K | | | | |
| RV341 | 1-241-786-11 | RES, ADJ, CARBON 22K | | | | |
| RV401 | 1-238-598-11 | RES, ADJ, CARBON 2.2K | | | | |
| RV411 | 1-238-598-11 | RES, ADJ, CARBON 2.2K | | | | |
| RV441 | 1-241-786-11 | RES, ADJ, CARBON 22K | | | | |
| RV651 | 1-238-599-11 | RES, ADJ, CARBON 4.7K | | | | |
| RV652 | 1-238-599-11 | RES, ADJ, CARBON 4.7K | | | | |
| | | < RELAY > | | | | |
| RY601 | 1-515-913-11 | RELAY | | | | |
| | | < TRANSFORMER > | | | | |
| T341 | 1-433-381-11 | TRANSFORMER, BIAS OSCILLATOR | | | | |
| T441 | 1-433-381-11 | TRANSFORMER, BIAS OSCILLATOR | | | | |
| T621 | 1-429-222-11 | TRANSFORMER, BIAS OSCILLATION | | | | |
| | | < TEST PIN > | | | | |
| * TP341 | 1-568-449-11 | HOUSING, CONNECTOR (PC BOARD) 3P | | | | |
| ********** | | | | | | |
| * | A-2007-483-A | MD BOARD, COMPLETE (WR350Z/WR661) | | | | |
| | | ********** (including MOTOR board) | | | | |
| | | MOTOR BOARD | | | | |
| | | < CAPACITOR > | | | | |
| C301 | 1-162-289-31 | CERAMIC | 390PF | 10% | 50V | |
| C302 | 1-126-968-11 | ELECT | 100uF | 20% | 6.3V | |
| C303 | 1-162-282-31 | CERAMIC | 100PF | 10% | 50V | |
| C304 | 1-130-483-00 | MYLAR | 0.01uF | 5% | 50V | |
| C305 | 1-107-715-11 | ELECT | 22uF | 20% | 16V | |
| C311 | 1-162-289-31 | CERAMIC | 390PF | 10% | 50V | |
| C313 | 1-162-282-31 | CERAMIC | 100PF | 10% | 50V | |
| C314 | 1-130-487-00 | MYLAR | 0.022uF | 5% | 50V | |
| C315 | 1-126-233-11 | ELECT | 22uF | 20% | 50V | |
| C331 | 1-136-434-11 | FILM | 120PF | 5% | 630V | |
| C332 | 1-162-288-31 | CERAMIC | 330PF | 10% | 50V | |

| | |
|---|---|
| The components identified by mark ⚠ or dotted line with mark ⚠ are critical for safety.<br>Replace only with part number specified. | Les composants identifiés par une marque ⚠ sont critiques pour la sécurité.<br>Ne les remplacer que par une piéce portant le numéro spécifié. |

| Ref.No. | Part No. | Description | | | | Remark |
|---|---|---|---|---|---|---|
| C333 | 1-162-217-31 | CERAMIC | 56PF | 5% | 50V | |
| C334 | 1-162-217-31 | CERAMIC | 56PF | 5% | 50V | |
| C401 | 1-162-289-31 | CERAMIC | 390PF | 10% | 50V | |
| C402 | 1-126-968-11 | ELECT | 100uF | 20% | 6.3V | |
| C403 | 1-162-282-31 | CERAMIC | 100PF | 10% | 50V | |
| C404 | 1-130-483-00 | MYLAR | 0.01uF | 5% | 50V | |
| C411 | 1-162-289-31 | CERAMIC | 390PF | 10% | 50V | |
| C413 | 1-162-282-31 | CERAMIC | 100PF | 10% | 50V | |
| C414 | 1-130-487-00 | MYLAR | 0.022uF | 5% | 50V | |
| C415 | 1-126-233-11 | ELECT | 22uF | 20% | 50V | |
| C431 | 1-136-434-11 | FILM | 120PF | 5% | 630V | |
| C432 | 1-162-288-31 | CERAMIC | 330PF | 10% | 50V | |
| C433 | 1-162-217-31 | CERAMIC | 56PF | 5% | 50V | |
| C434 | 1-162-217-31 | CERAMIC | 56PF | 5% | 50V | |
| C601 | 1-126-157-11 | ELECT | 10uF | 20% | 16V | |
| C602 | 1-126-157-11 | ELECT | 10uF | 20% | 16V | |
| C611 | 1-124-907-11 | ELECT | 10uF | 20% | 50V | |
| C612 | 1-124-907-11 | ELECT | 10uF | 20% | 50V | |
| C621 | 1-137-150-11 | FILM | 0.01uF | 5% | 100V | |
| C622 | 1-126-961-11 | ELECT | 2.2uF | 20% | 50V | |
| C623 | 1-136-155-00 | FILM | 0.015uF | 5% | 50V | |
| C624 | 1-130-481-00 | MYLAR | 0.0068uF | 5% | 50V | |
| C625 | 1-130-481-00 | MYLAR | 0.0068uF | 5% | 50V | |
| C627 | 1-124-903-11 | ELECT | 1uF | 20% | 50V | |
| C628 | 1-136-153-00 | FILM | 0.01uF | 5% | 50V | |
| C642 | 1-104-664-11 | ELECT | 47uF | 20% | 16V | |
| C651 | 1-161-494-00 | CERAMIC | 0.022uF | | 25V | |
| | | < CONNECTOR > | | | | |
| * CN601 | 1-568-864-11 | SOCKET, CONNECTOR 21P | | | | |
| * CN651 | 1-564-521-11 | PLUG, CONNECTOR 6P | | | | |
| | | < IC > | | | | |
| IC601 | 8-759-710-59 | IC NJM4580D-D | | | | |
| IC602 | 8-759-143-54 | IC uPC1330HA | | | | |
| IC611 | 8-759-710-59 | IC NJM4580D-D | | | | |
| | | < COIL > | | | | |
| L331 | 1-410-780-11 | INDUCTOR | 27mH | | | |
| L431 | 1-410-780-11 | INDUCTOR | 27mH | | | |
| | | < MOTOR > | | | | |
| M2 | A-2004-410-A | MOTOR ASSY, DC (TRIGGER) | | | | |
| | | < TRANSISTOR > | | | | |
| Q621 | 8-729-142-46 | TRANSISTOR | 2SC2001-LK | | | |
| Q622 | 8-729-142-46 | TRANSISTOR | 2SC2001-LK | | | |
| Q623 | 8-729-801-93 | TRANSISTOR | 2SD1387 | | | |
| Q651 | 8-729-900-65 | TRANSISTOR | DTA144ES | | | |

| Ref.No. | Part No. | Description | | | | Remark |
|---|---|---|---|---|---|---|
| | | < RESISTOR > | | | | |
| R301 | 1-247-881-00 | CARBON | 120K | 5% | 1/4W | |
| R302 | 1-249-409-11 | CARBON | 220 | 5% | 1/4W | F |
| R303 | 1-249-433-11 | CARBON | 22K | 5% | 1/4W | |
| R304 | 1-247-889-00 | CARBON | 270K | 5% | 1/4W | |
| R305 | 1-247-858-11 | CARBON | 13K | 5% | 1/4W | |
| R311 | 1-247-881-00 | CARBON | 120K | 5% | 1/4W | |
| R312 | 1-247-807-31 | CARBON | 100 | 5% | 1/4W | |
| R314 | 1-247-882-11 | CARBON | 130K | 5% | 1/4W | |
| R315 | 1-247-850-11 | CARBON | 6.2K | 5% | 1/4W | |
| R331 | 1-249-430-11 | CARBON | 12K | 5% | 1/4W | |
| R401 | 1-247-881-00 | CARBON | 120K | 5% | 1/4W | |
| R402 | 1-249-409-11 | CARBON | 220 | 5% | 1/4W | F |
| R403 | 1-249-433-11 | CARBON | 22K | 5% | 1/4W | |
| R404 | 1-247-889-00 | CARBON | 270K | 5% | 1/4W | |
| R405 | 1-247-858-11 | CARBON | 13K | 5% | 1/4W | |
| R411 | 1-247-881-00 | CARBON | 120K | 5% | 1/4W | |
| R412 | 1-247-807-31 | CARBON | 100 | 5% | 1/4W | |
| R414 | 1-247-882-11 | CARBON | 130K | 5% | 1/4W | |
| R415 | 1-247-850-11 | CARBON | 6.2K | 5% | 1/4W | |
| R431 | 1-249-430-11 | CARBON | 12K | 5% | 1/4W | |
| R601 | 1-249-409-11 | CARBON | 220 | 5% | 1/4W | F |
| R602 | 1-249-409-11 | CARBON | 220 | 5% | 1/4W | F |
| R608 | 1-249-409-11 | CARBON | 220 | 5% | 1/4W | F |
| R609 | 1-249-433-11 | CARBON | 22K | 5% | 1/4W | |
| R611 | 1-249-409-11 | CARBON | 220 | 5% | 1/4W | F |
| R612 | 1-249-409-11 | CARBON | 220 | 5% | 1/4W | F |
| ⚠R621 | 1-212-851-00 | FUSIBLE | 5.6 | 5% | 1/4W | F |
| ⚠R622 | 1-212-851-00 | FUSIBLE | 5.6 | 5% | 1/4W | F |
| R623 | 1-249-432-11 | CARBON | 18K | 5% | 1/4W | |
| R624 | 1-249-432-11 | CARBON | 18K | 5% | 1/4W | |
| R625 | 1-249-429-11 | CARBON | 10K | 5% | 1/4W | |
| R651 | 1-247-856-00 | CARBON | 11K | 5% | 1/4W | |
| R652 | 1-247-856-00 | CARBON | 11K | 5% | 1/4W | |
| R653 | 1-249-441-11 | CARBON | 100K | 5% | 1/4W | |
| | | < VARIABLE RESISTOR > | | | | |
| RV301 | 1-238-598-11 | RES, ADJ, CARBON 2.2K | | | | |
| RV311 | 1-238-598-11 | RES, ADJ, CARBON 2.2K | | | | |
| RV341 | 1-238-551-11 | RES, ADJ, CARBON 220K | | | | |
| RV401 | 1-238-598-11 | RES, ADJ, CARBON 2.2K | | | | |
| RV411 | 1-238-598-11 | RES, ADJ, CARBON 2.2K | | | | |
| RV441 | 1-238-551-11 | RES, ADJ, CARBON 220K | | | | |
| RV651 | 1-238-599-11 | RES, ADJ, CARBON 4.7K | | | | |
| RV652 | 1-238-599-11 | RES, ADJ, CARBON 4.7K | | | | |
| | | < TRANSFORMER > | | | | |
| T621 | 1-423-980-11 | TRANSFORMER, BIAS OSCILLATION | | | | |

**********

| | |
|---|---|
| The components identified by mark ⚠ or dotted line with mark ⚠ are critical for safety.<br>Replace only with part number specified. | Les composants identifiés par une marque ⚠ sont critiques pour la sécurité.<br>Ne les remplacer que par une piéce portant le numéro spécifié. |

| Ref. No. | Part No. | Description | Remark |
|---|---|---|---|
| | | MISCELLANEOUS | |
| | | ********** | |
| ⚠7 | 1-558-945-21 | CORD, POWER (POLAR. SPT-1) (WE405:US, CND, E/WR350Z/WR661:US, CND) | |
| ⚠7 | 1-575-651-21 | CORD, POWER (WE405:AEP, CH, MY, SP, G/WR661:AEP, G, IT) | |
| ⚠7 | 1-696-027-11 | CORD, POWER (WE405:E/WR661:E) | |
| ⚠7 | 1-696-845-11 | CORD, POWER (WE405:AUS) | |
| ⚠7 | 1-751-523-11 | CORD, POWER (WE405:UK) | |
| ⚠7 | 1-769-639-11 | CORD, POWER (WR661:UK) | |
| ⚠8 | 1-569-007-11 | ADAPTER, CONVERSION 2P (WE405:E/WR661:E) | |
| 67 | 1-773-332-11 | WIRE (FLAT TYPE) (31 CORE) | |
| 68 | 1-769-950-11 | WIRE (FLAT TYPE) (11 CORE) | |
| 69 | 1-773-153-11 | WIRE (FLAT TYPE) (21 CORE) | |
| FLT901 | 1-517-491-11 | INDICATOR TUBE, FLUORESCENT | |
| HP101 | 1-500-093-11 | HEAD, MAGNETIC (PLAYBACK) | |
| HRPE101 | 1-500-094-11 | HEAD, MAGNETIC (REC/PB/ERASE) | |
| M1 | X-3371-223-1 | MOTOR ASSY (CAPSTAN) | |
| M2 | A-2004-410-A | MOTOR ASSY, DC (TRRIGER) | |
| ⚠T901 | 429-387-11 | TRANSFORMER, POWER (WE405:US, CND/WR350Z/WR661:US, CND) | |
| ⚠T901 | 429-388-11 | TRANSFORMER, POWER (WE405:AEP, CH, MY, SP, UK, G, AUS/WR661:AEP, UK, G, IT) | |
| ⚠T901 | 429-389-11 | TRANSFORMER, POWER (WE405:E/WR661:E) | |
| ⚠VS901 | 692-155-11 | SELECTOR, POWER VOLTAGE (WE405:E/WR661:E) | |
| ********** | | | |
| | | ACCESSORIES & PACKING MATERIALS | |
| | | ********** | |
| | 1-551-734-11 | CORD, CONNECTION (158cm AUDIO) | |
| | 3-810-312-11 | MANUAL, INSTRUCTION (ENGLISH) (WE405:US, CND, UK, AUS/WR350Z/WR661:US, CND) | |
| | 3-810-312-21 | MANUAL, INSTRUCTION (FRENCH) (CND) | |
| | 3-810-312-31 | MANUAL, INSTRUCTION (ENGLISH, FRENCH, SPANISH, PORTUGUESE) (WE405:AEP, CH, MY, SP, E) | |
| | 3-810-312-41 | MANUAL, INSTRUCTION (GERMAN, DUTCH, SWEDISH, ITALIAN) (WE405:AEP, CH, MY, SP) | |
| | 3-810-312-51 | MANUAL, INSTRUCTION (GERMAN) (WE405:G) | |
| | 3-810-312-61 | MANUAL, INSTRUCTION (CHINESE) (WE405:E) | |
| | 3-810-312-71 | MANUAL, INSTRUCTION (ARABIC) (WR661:E) | |
| * | 3-932-083-01 | CUSHION | |
| * | 3-932-085-01 | INDIVIDUAL CARTON (WE405/WR350Z:CND) | |
| * | 3-932-086-01 | INDIVIDUAL CARTON (WR661:AEP, UK, G, IT) | |
| * | 3-932-087-01 | INDIVIDUAL CARTON (WR350Z:US) | |
| * | 3-934-928-01 | INDIVIDUAL CARTON (WR661:US, CND) | |
| ********** | | | |

| Ref. No. | Part No. | Description | Remark |
|---|---|---|---|
| | | ********** | |
| | | HARDWARE LIST | |
| | | ********** | |
| #1 | 7-682-548-04 | SCREW +BVTT 3X8 (S) | |
| #2 | 7-685-871-01 | SCREW +BVTT 3X6 (S) | |
| #3 | 7-685-646-79 | SCREW +BVTP 3X8 TYPE2 N-S | |
| #4 | 7-685-134-19 | SCREW (+ PTPWH) (2.6X8) (WE405/WR350Z) | |
| #5 | 7-621-770-67 | SCREW +BVTT 2.6X6 (S) | |
| #6 | 7-685-131-19 | SCREW +BTP 2.6X4 TYPE2 N-S | |
| #7 | 7-685-534-19 | SCREW +BTP 2.6X8 TYPE2 N-S | |
| #8 | 7-621-775-10 | SCREW +B 2.6X4 | |
| #9 | 7-621-775-00 | SCREW +B 2.6X3 | |
| #10 | 7-623-921-01 | RING, RETAINING, CAPSTAN | |
| #11 | 7-685-533-19 | SCREW +BTP 2.6X6 TYPE2 N-S | |

| | |
|---|---|
| The components identified by mark ⚠ or dotted line with mark ⚠ are critical for safety.<br>Replace only with part number specified. | Les composants identifiés par une marque ⚠ sont critiques pour la sécurité.<br>Ne les remplacer que par une piéce portant le numéro spécifié. |

9-960-528-11

Sony Corporation
Consumer A&V Products Company
Home A&V Products Div.

English
96B0995-1
Printed in Japan
© 1996. 2
Published by Home A&V Products Div.
Quality Engineering Dept.

# TC-WE405/WR350Z/WR661

SONY
# SERVICE MANUAL

*US Model*
*Canadian Model*
*TC-WE405/WR350Z/WR661*
*AEP Model*
*UK Model*
*E Model*
*Australian Model*
*TC-WE405/WR661*
*Chinese Model*
*TC-WE405*

# SUPPLEMENT-1

File this supplement with the service manual.

**Subject : 1. CORRECTION**
**2. MODEL ADDITION (TC-WR661 : Singapore, Australian model)**
**3. PARTS CHANGE**

(ECN-TC600191)

- The suffix of MAIN board has changed from suffix-[11] to [12]. The large change cannot be find with this change, so it is not notified.
  The common changes of suffix-[11] and [12] are notified in this supplement.

## MODEL IDENTIFICATION

*— BACK PANEL —*

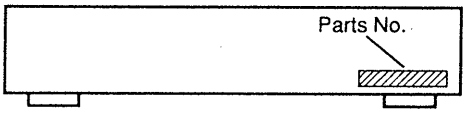


**TC-WE405**

| MODEL | PARTS No. |
|---|---|
| US | 3-931-433-0□ |
| CND | 3-931-433-1□ |
| AEP, G, MY, SP, CH | 3-931-433-2□ |
| UK | 3-931-433-3□ |
| E | 3-931-433-4□ |
| AUS | 3-931-433-5□ |

**TC-WR350Z**

| MODEL | PARTS No. |
|---|---|
| US | 3-934-887-0□ |
| CND | 3-934-887-1□ |

**TC-WR661**

| MODEL | PARTS No. |
|---|---|
| US | 3-931-436-0□ |
| CND | 3-931-436-1□ |
| AEP, G, IT | 3-931-436-2□ |
| UK | 3-931-436-3□ |
| E | 3-931-436-4□ |
| AUS | 3-931-436-5□ |
| SP | 3-931-436-6□ |

- Abbreviation
  CND : Canadian model.
  G : German model.
  IT : Italian model.
  SP : Singapore model.
  MY : Malaysia model.
  AUS : Australian model.
  CH : Chinese model.


**English**
96E0992-1
Printed in Japan


© 1996. 5


**Published by Quality Engineering Dept. (Shibaura)**

9-960-528-81

**Sony Corporation**
**Home A&V Products Company**

# 1. CORRECTION

- Correct your Service Manual as shown below.

☛: Indicates corrected portion

<table>
<tr><th>Page</th><th>INCORRECT</th><th>CORRECT</th></tr>
<tr><td>6</td><td>Torque Measurement
<table>
<tr><th>Torque</th><th>Torque meter</th><th>Meter reading</th></tr>
<tr><td>FWD tension</td><td>CQ-403Q</td><td>100g • cm or more<br>(1.39 oz • inch or more)</td></tr>
<tr><td>REV tension</td><td>CQ-403R</td><td>100g • cm or more<br>(1.39 oz • inch or more)</td></tr>
</table></td><td>Torque Measurement
<table>
<tr><th>Torque</th><th>Torque meter</th><th>Meter reading</th></tr>
<tr><td>FWD tension</td><td>CQ-403Q</td><td>100g or more<br>(3.53 oz or more)</td></tr>
<tr><td>REV tension</td><td>CQ-403R</td><td>100g or more<br>(3.53 oz or more)</td></tr>
</table></td></tr>
<tr><td>29</td><td>Ref.No Part No Description Remark<br>*** EXPLODED VIEWS ***<br>11 4-977-358-01 CUSHION (8X12.5)(WE405/WR350Z)<br> 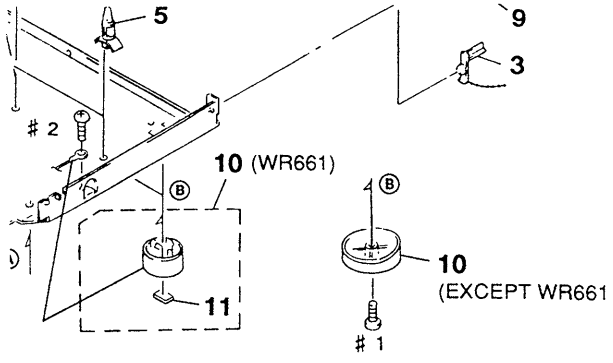
</td><td>Ref.No Part No Description Remark<br>*** EXPLODED VIEWS ***<br>not supplied<br> 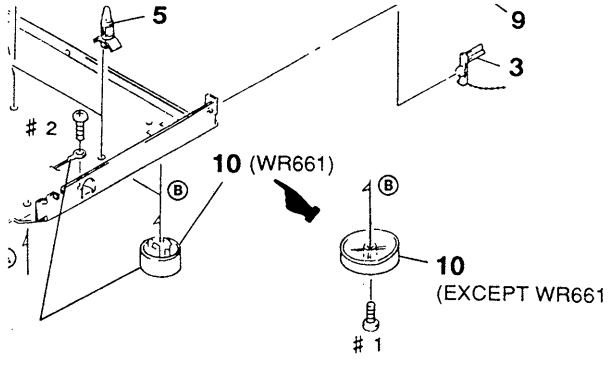
</td></tr>
<tr><td></td><td>⚠T901 429-387-11 TRANSFORMER, POWER<br>(WE405:US, CND/WR350Z/WR661:US, CND)<br>⚠T901 429-388-11 TRANSFORMER, POWER<br>(WE405:AEP, CH, MY, SP, UK, G, AUS/WR661:AEP, SP, UK, G, IT)<br>⚠T901 429-389-11 TRANSFORMER, POWER (WE405:E/WR661:E)<br>⚠VS901 692-155-11 SELECTOR, POWER VOLTAGE<br>(WE405:E/WR661:E)</td><td>⚠T901 1-429-387-11 TRANSFORMER, POWER<br>(WE405:US, CND/WR350Z/WR661:US, CND)<br>⚠T901 1-429-388-11 TRANSFORMER, POWER<br>(WE405:AEP, CH, MY, SP, UK, G, AUS/WR661:AEP, SP, UK, G, IT)<br>⚠T901 1-429-389-11 TRANSFORMER, POWER (WE405:E/WR661:E)<br>⚠VS901 1-692-155-11 SELECTOR, POWER VOLTAGE<br>(WE405:E/WR661:E)</td></tr>
</table>

NOTE:

- Abbreviation
  - CND : Canadian model
  - G : German model
  - IT : Italian model
  - SP : Singapore model
  - MY : Malaysia model
  - AUS : Australian model
  - CH : Chinese model

The components identified by mark ⚠ or dotted line with mark ⚠ are critical for safety.
Replace only with part number specified.

Les composants identifiés par une marque ⚠ sont critiques pour la sécurité.
Ne les remplacer que par une piéce portant le numéro spécifié.

| | |
|---|---|
| The components identified by mark ⚠ or dotted line with mark ⚠ are critical for safety.<br>Replace only with part number specified. | Les composants identifiés par une marque ⚠ sont critiques pour la sécurité.<br>Ne les remplacer que par une piéce portant le numéro spécifié. |

| Page | INCORRECT | CORRECT |
|---|---|---|
| 32 | 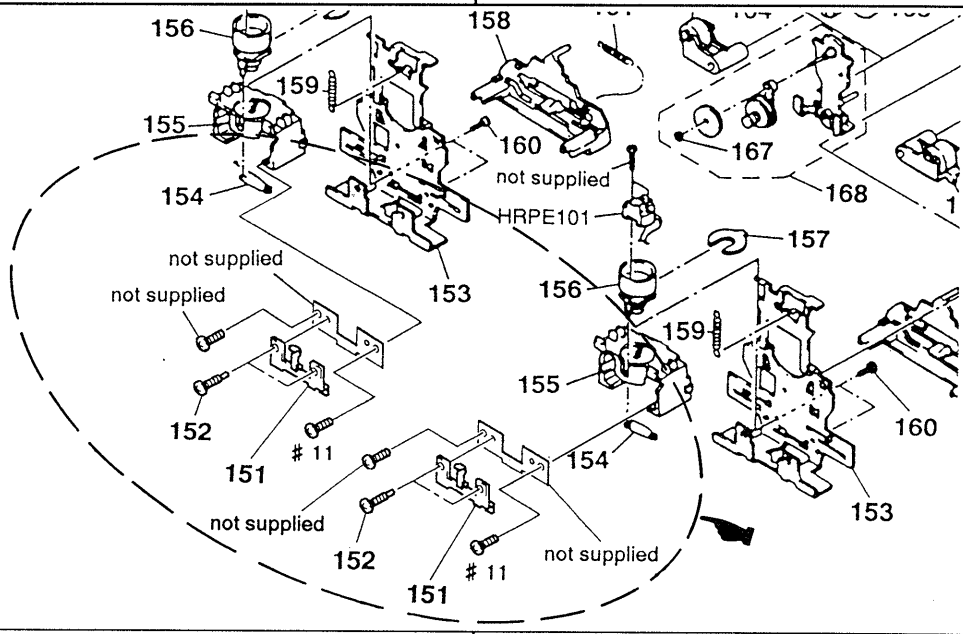 | |

| Page | Ref.No | Part No | Description | Remark |
|---|---|---|---|---|
| 41 | | | *** MISCELLANEOUS *** | |
| | ⚠T901 | 429-387-11 | TRANSFORMER, POWER (WE405:US, CND/WR350Z/WR661:US, CND) | |
| | ⚠T901 | 429-388-11 | TRANSFORMER, POWER (WE405:AEP, CH, MY, SP, UK, G, AUS/WR661:AEP, SP, UK, G, IT) | |
| | ⚠T901 | 429-389-11 | TRANSFORMER, POWER (WE405:E/WR661:E) | |
| | ⚠VS901 | 692-155-11 | SELECTOR, POWER VOLTAGE (WE405:E/WR661:E) | |

| Ref.No | Part No | Description | Remark |
|---|---|---|---|
| | | *** MISCELLANEOUS *** | |
| ⚠T901 | 1-429-387-11 | TRANSFORMER, POWER (WE405:US, CND/WR350Z/WR661:US, CND) | |
| ⚠T901 | 1-429-388-11 | TRANSFORMER, POWER (WE405:AEP, CH, MY, SP, UK, G, AUS/WR661:AEP, SP, UK, G, IT) | |
| ⚠T901 | 1-429-389-11 | TRANSFORMER, POWER (WE405:E/WR661:E) | |
| ⚠VS901 | 1-692-155-11 | SELECTOR, POWER VOLTAGE (WE405:E/WR661:E) | |

**ACCESSORIES & PACKING MATERIALS** (Revised including corrections and addition of models.)

| Page | Ref.No | Part No | Description | Remark |
|---|---|---|---|---|
| 41 | | 1-551-734-11 | CORD, CONNECTION (158cm AUDIO) | |
| | | 3-810-312-11 | MANUAL, INSTRUCTION (ENGLISH) (WE405:US, CND, UK, AUS/WR350Z/WR661:US, CND) | |
| | | 3-810-312-21 | MANUAL, INSTRUCTION (FRENCH) (CND) | |
| | | 3-810-312-31 | MANUAL, INSTRUCTION (ENGLISH, FRENCH, SPANISH, PORTUGUESE) (WE405:AEP, CH, MY, SP, E) | |
| | | 3-810-312-41 | MANUAL, INSTRUCTION (GERMAN, DUTCH, SWEDISH, ITALIAN) (WE405:AEP, CH, MY, SP) | |
| | | 3-810-312-51 | MANUAL, INSTRUCTION (GERMAN) (WE405:G) | |
| | | 3-810-312-61 | MANUAL, INSTRUCTION (CHINESE) (WE405:E) | |
| | | 3-810-312-71 | MANUAL, INSTRUCTION (ARABIC) (WR661:E) | |
| | * | 3-932-083-01 | CUSHION | |
| | * | 3-932-085-01 | INDIVIDUAL CARTON (WE405/WR350Z:CND) | |
| | * | 3-932-086-01 | INDIVIDUAL CARTON (WR661:AEP, UK, G, IT) | |
| | * | 3-932-087-01 | INDIVIDUAL CARTON (WR350Z:US) | |
| | * | 3-934-928-01 | INDIVIDUAL CARTON (WR661:US, CND) | |

| Ref.No | Part No | Description | Remark |
|---|---|---|---|
| | 1-551-734-11 | CORD, CONNECTION (158cm AUDIO) | |
| | 3-810-312-11 | MANUAL, INSTRUCTION (ENGLISH) (WE405:US, CND, UK, AUS/WR350Z/WR661:US, CND, UK, AUS) | |
| | 3-810-312-21 | MANUAL, INSTRUCTION (FRENCH) (CND) | |
| | 3-810-312-31 | MANUAL, INSTRUCTION (ENGLISH, FRENCH, SPANISH, PORTUGUESE) (WE405:AEP, E/WR661:AEP, SP, E) | |
| | 3-810-312-41 | MANUAL, INSTRUCTION (GERMAN, DUTCH, SWEDISH, ITALIAN) (WE405:AEP/WR661:AEP) | |
| | 3-810-312-51 | MANUAL, INSTRUCTION (GERMAN) (WE405:G/WR661:G) | |
| | 3-810-312-61 | MANUAL, INSTRUCTION (CHINESE) (WE405:AEP, E, CH/WR661:SP, E) | |
| | 3-810-312-71 | MANUAL, INSTRUCTION (ARABIC) (WR661:E) | |
| * | 3-932-083-01 | CUSHION | |
| * | 3-932-085-01 | INDIVIDUAL CARTON (WR350Z:CND) | |
| * | 3-932-086-01 | INDIVIDUAL CARTON (WR661:AEP, UK, G, IT) | |
| * | 3-932-087-01 | INDIVIDUAL CARTON (WR350Z:US) | |
| * | 3-934-927-01 | INDIVIDUAL CARTON (WE405) | |
| * | 3-934-928-01 | INDIVIDUAL CARTON (WR661:US) | |
| * | 3-936-956-01 | INDIVIDUAL CARTON (WR661:CND, SP, E, AUS) | |

# 2. MODEL ADDITION (TC-WR661: Singapore, Australian model)

- **For detailed SP, AUS model, refer to E model.**

**Difference table**

| Page | TC-WR661: E model | | | | TC-WR661: SP, AUS model | | | |
|---|---|---|---|---|---|---|---|---|
| | Ref. No | Part No | Description | Remark | Ref. No | Part No | Description | Remark |
| 29 | | | *** EXPLODED VIEWS *** | | | | *** EXPLODED VIEWS *** | |
| | * 4 | A-2007-487-A | MAIN BOARD, COMPLETE (WR661:E) | | * 4 | A-2007-487-A | MAIN BOARD, COMPLETE (WR661:SP, E) | |
| | | | | | * 4 | A-2007-590-A | MAIN BOARD, COMPLETE (WR661:AUS) | |
| | * 6 | 3-703-571-11 | BUSHING (S)(4516), CORD (WR661:E) | | * 6 | 3-703-244-00 | BUSHING (2104), CORD (WR661:SP, AUS) | |
| | ⚠7 | 1-696-027-11 | CORD, POWER (WR661:E) | | ⚠7 | 1-575-651-21 | CORD, POWER (WR661:SP, AUS) | |
| | ⚠8 | 1-569-007-11 | ADAPTER, CONVERSION 2P (WR661:E) | | | | | |
| | * 9 | 3-931-436-42 | PANEL, BACK (WR661:E) | | * 9 | 3-931-436-51 | PANEL, BACK (WR661:AUS) | |
| | | | | | * 9 | 3-931-436-61 | PANEL, BACK (WR661:SP) | |
| | ⚠T901 | 1-429-389-11 | TRANSFORMER, POWER (WR661:E) | | ⚠T901 | 1-429-388-11 | TRANSFORMER, POWER (WR661:AUS) | |
| | | | | | ⚠T901 | 1-429-389-11 | TRANSFORMER, POWER (WR661:SP, E) | |
| | ⚠VS901 | 1-692-155-11 | SELECTOR, POWER VOLTAGE (WR661:E) | | ⚠VS901 | 1-692-155-11 | SELECTOR, POWER VOLTAGE (WR661:SP, E) | |
| 34 | | | *** ELECTRICAL PARTS LIST *** | | | | *** ELECTRICAL PARTS LIST *** | |
| | * | A-2007-487-A | MAIN BOARD, COMPLETE (WR661:E) | | * | A-2007-487-A | MAIN BOARD, COMPLETE (WR661:SP, E) | |
| | | | | | * | A-2007-590-A | MAIN BOARD, COMPLETE (AUS) | |
| 35 | CN703 | 1-568-106-11 | PIN, CONNECTOR 4P (WR661:E) | | CN703 | 1-568-106-11 | PIN, CONNECTOR 4P (WR661:SP, E) | |
| 38 | ⚠T901 | 1-429-389-11 | TRANSFORMER, POWER (WR661:E) | | ⚠T901 | 1-429-388-11 | TRANSFORMER, POWER (WR661:AUS) | |
| | | | | | ⚠T901 | 1-429-389-11 | TRANSFORMER, POWER (WR661:SP, E) | |
| 41 | | | *** MISCELLANEOUS *** | | | | *** MISCELLANEOUS *** | |
| | ⚠7 | 1-696-027-11 | CORD, POWER (WR661:E) | | ⚠7 | 1-575-651-21 | CORD, POWER (WR661:SP, AUS) | |
| | ⚠8 | 1-569-007-11 | ADAPTER, CONVERSION 2P (WR661:E) | | | | | |
| | ⚠T901 | 1-429-389-11 | TRANSFORMER, POWER (WR661:E) | | ⚠T901 | 1-429-388-11 | TRANSFORMER, POWER (WR661:AUS) | |
| | | | | | ⚠T901 | 1-429-389-11 | TRANSFORMER, POWER (WR661:SP, E) | |
| | ⚠VS901 | 1-692-155-11 | SELECTOR, POWER VOLTAGE (WR661:E) | | ⚠VS901 | 1-692-155-11 | SELECTOR, POWER VOLTAGE (WR661:SP, E) | |
| | **Note:** Refer to CORRECTION on page 3 about the ACCESSORIES & PACKING MATERIALS. | | | | | | | |

NOTE:
- Abbreviation
  SP : Singapore model
  AUS : Australian model

The components identified by mark ⚠ or dotted line with mark ⚠ are critical for safety.
Replace only with part number specified.

# 3. PARTS CHANGE

| Page | FORMER | | | | NEW | | | |
|---|---|---|---|---|---|---|---|---|
| | Ref.No | Part No | Description | Remark | Ref.No | Part No | Description | Remark |
| 29 | | | *** EXPLODED VIEWS *** | | | | *** EXPLODED VIEWS *** | |
| | | | | | ⚠8 | 1-569-008-21 | ADAPTER, CONVERSION 2P (WE405:CH) | |
| | | | | | 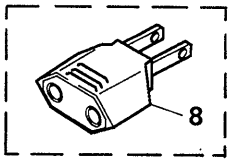 (WE405: CH) | | | |
| 30 | 59 | 4-977-358-01 | CUSHION (8X12.5) | | 59 | 4-977-358-11 | CUSHION (8X12.5) | |
| | 68 | 1-769-950-11 | WIRE (FLAT TYPE) (11 CORE) | | 68 | 1-765-325-11 | WIRE (FLAT TYPE) (11 CORE) | |
| 35 | | | *** MAIN BOARD, COMPLETE *** | | | | *** MAIN BOARD, COMPLETE *** | |
| | C813 | 1-137-446-11 | FILM 0.18uF 5% 50V | | C813 | 1-136-168-00 | FILM 0.18uF 5% 50V | |
| | CNF803 | 1-568-838-11 | SOCKET, CONNECTOR 21P | | CNF803 | 1-695-344-11 | SOCKET, CONNECTOR 21P | |
| | * CNF804 | 1-568-830-11 | SOCKET, CONNECTOR 11P | | * CNF804 | 1-695-334-11 | SOCKET, CONNECTOR 11P | |
| | * CNF805 | 1-568-830-11 | SOCKET, CONNECTOR 11P | | * CNF805 | 1-695-334-11 | SOCKET, CONNECTOR 11P | |
| | * CNF806 | 1-568-830-11 | SOCKET, CONNECTOR 11P | | * CNF806 | 1-695-334-11 | SOCKET, CONNECTOR 11P | |
| 36 | R510 | 1-247-807-31 | CARBON 10 5% 1/4W | | R510 | | JUMPER WIRE | |
| 37 | R714 | 1-249-428-11 | CARBON 8.2K 5% 1/4W F | | R714 | 1-249-429-11 | CARBON 10K 5% 1/4W F | |
| | ⚠R723 | 1-217-371-00 | FUSIBLE 0.47 10% 1/4W | | ⚠R723 | 1-219-138-91 | FUSIBLE 0.47 10% 1/4W | |
| | R836 | 1-249-426-11 | CARBON 5.6K 5% 1/4W (WE405) | | R836 | 1-249-427-11 | CARBON 6.8K 5% 1/4W F(WE405) | |
| 41 | | | *** MISCELLANEOUS *** | | | | *** MISCELLANEOUS *** | |
| | | | | | ⚠8 | 1-569-008-21 | ADAPTER, CONVERSION 2P (WE405:CH) | |
| | 68 | 1-769-950-11 | WIRE (FLAT TYPE) (11 CORE) | | 68 | 1-765-325-11 | WIRE (FLAT TYPE) (11 CORE) | |

NOTE:
- Abbreviation
  - SP : Singapore model
  - MY : Malaysia model
  - CH : Chinese model

The components identified by mark ⚠ or dotted line with mark ⚠ are critical for safety.
Replace only with part number specified.

Les composants identifiés par une marque ⚠ sont critiques pour la sécurité.
Ne les remplacer que par une piéce portant le numéro spécifié.

# TC-WE405/WR350Z/WR661

SONY

# SERVICE MANUAL

*US Model*
*Canadian Model*
*TC-WE405/WR350Z/WR661*
*AEP Model*
*UK Model*
*E Model*
*TC-WE405/WR661*
*Australian Model*
*Chinese Model*
*TC-WE405*

## CORRECTION-1

**Correct your service manual as shown below.**

| Page | INCORRECT | | | | CORRECT | | | |
|---|---|---|---|---|---|---|---|---|
| | Ref. No. | Part No. | Description | Remark | Ref. No. | Part No. | Description | Remark |
| 31 | 101 | X-4945-690-1 | HOLDER (L) ASSY, CASSETTE | | 101 | X-4945-691-1 | HOLDER (R) ASSY, CASSETTE | |
| | 102 | X-4945-691-1 | HOLDER (R) ASSY, CASSETTE | | 102 | X-4945-690-1 | HOLDER (L) ASSY, CASSETTE | |

(RPC-99002)

9-960-528-91

**Sony Corporation**
**Home Audio Company**

99H001689-1
Printed in Japan ©1999.8
**Published by Quality Assurance Dept.**